DR62-L24A

Electrical

Switch Type	DPDT*
Actuator Type	Latching
Frequency Range	11.9-18 GHz
VSWR	1.1 max
Insertion Loss	0.15 dB max
Isolation	65 dB min
Input Power (CW)	1000 W max
Actuating Voltage	24±2V DC
Actuating Current	1A



Generic photo used for illustration only

*Adding an additional waveguide load for SPDT option.

Mechanical & Environmental

Switching Time	120 ms Typical
Operating Life	0.1 Million Cycles
Waveguide Size	WR62
Flange Type	UBR140
Waveguide and Flange	Aluminum, Conductive Oxidation
Motor Finish	Black Anodizing
Actuator Terminals	MS3112E10-6P
Operating Temperature	-40℃~+85℃
Storage Temperature	-55℃~+100℃
Humidity	100% with the cap**
Pressure	30 PSIG with the cap, including the driver
Ingress Protection Rating	IP65 with the cap

**The weatherized cap is an integral part of the switch.
Remove the cap for access to manual override.

WR62 Waveguide Electromechanical Switch, DPDT, Latching, 24V, UBR140 Flange

Drawing (Dimensions are in mm)

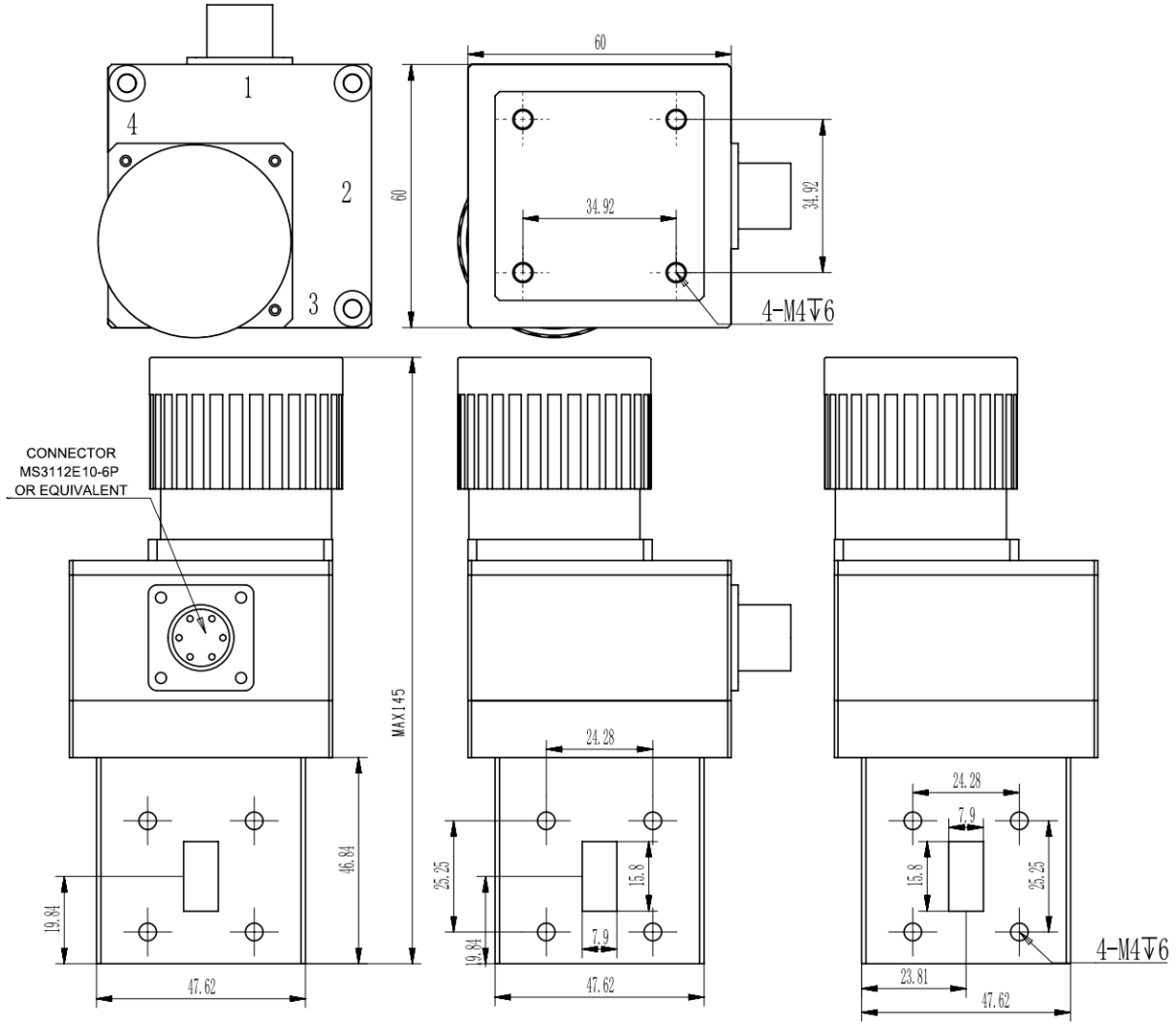

Schematic

