DR28-L24A

Electrical

Switch Type	DPDT*
Actuator Type	Latching
Frequency Range	26.3-40 GHz
VSWR	1.15 max
Insertion Loss	0.15 dB max
Isolation	70 dB min
Input Power (CW)	500 W max
Actuating Voltage	24±2V DC
Actuating Current	1A



Generic photo used for illustration only

*Adding an additional waveguide load for SPDT option.

Mechanical & Environmental

Switching Time	80 ms Typical
Operating Life	0.1 Million Cycles
Waveguide Size	WR28
Flange Type	UBR320
Waveguide and Flange	Aluminum, Conductive Oxidation
Motor Finish	Black Anodizing
Actuator Terminals	MS3112E10-6P
Operating Temperature	-40℃~+85℃
Storage Temperature	-55℃~+100℃
Humidity	100% with the cap**
Pressure	30 PSIG with the cap, including the driver
Ingress Protection Rating	IP65 with the cap

**The weatherized cap is an integral part of the switch.
Remove the cap for access to manual override.

DR28-L24A

WR28 Waveguide Electromechanical Switch, DPDT, Latching, 24V, UBR320 Flange

Drawing (Dimensions are in mm)

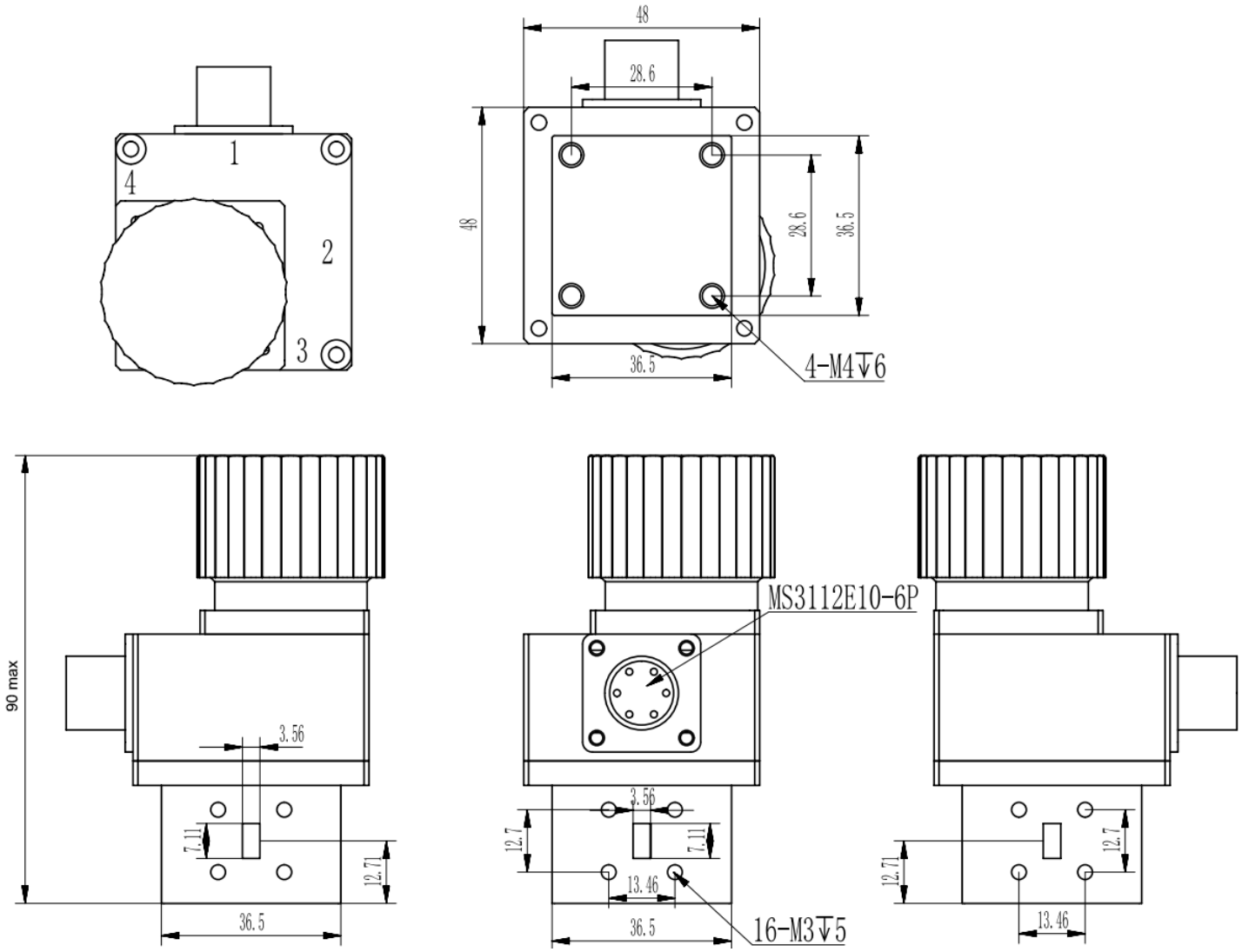

Schematic

