Waveguide Broadwall Directional Coupler DCW28292F-40



40dB, WR28, 26.3-40 GHz, Square Cover Flange, 2.92mm Female Coupled Port

---

Electrical

Frequency Range	26.3-40 GHz
VSWR	1.10 max(Main line), 1.3 max (Secondary line)
Coupling	40 ± 1 dB
Directivity	25 dB min
Operating Temperature	-40℃~+70℃

Mechanical

Waveguide Size	WR28(R320)
Flange Type	IEC: UBR320
Flange Material and plating	Aluminum, Conductive oxidation
Body Material and Plating	Aluminum, Painted
Coupled Port	2.92mm Female

Dimensions(mm)

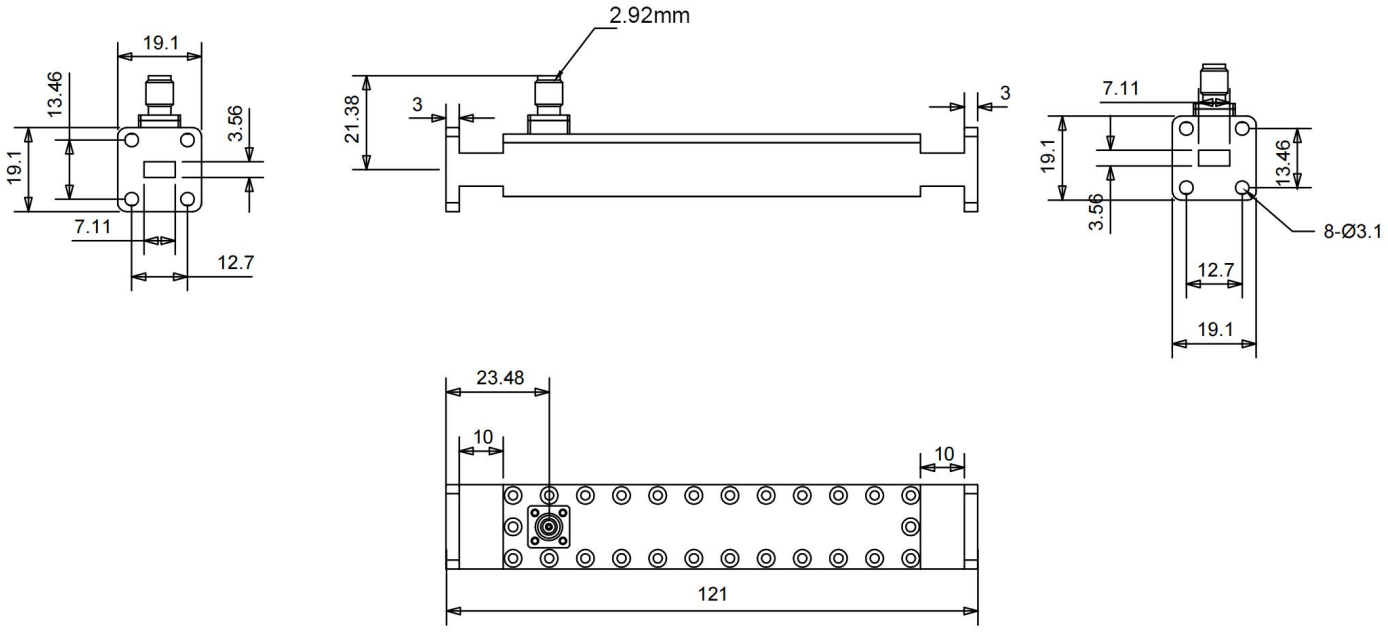

Waveguide Broadwall Directional Coupler **DCW28292F-40**



40dB, WR28, 26.3-40 GHz, Square Cover Flange, 2.92mm Female Coupled Port

Typical Test Data

