Waveguide Broadwall Directional Coupler

DCW19-40

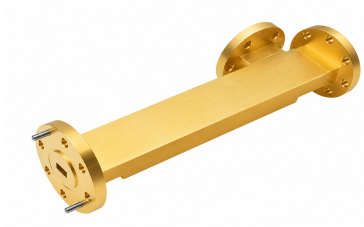

Electrical

Frequency Range	39.2-59.6 GHz
VSWR	1.10 max(Main line), 1.15 max (Secondary line)
Coupling	40 ± 1.0 dB
Directivity	27 dB min
Operating Temperature	-40℃~+70℃

Mechanical

Waveguide Size	WR19(R500)
Flange Type	UG383/U(Modified)
Flange Material and plating	Copper, gold plated
Body Material and Plating	Copper, gold plated

Dimensions(mm)

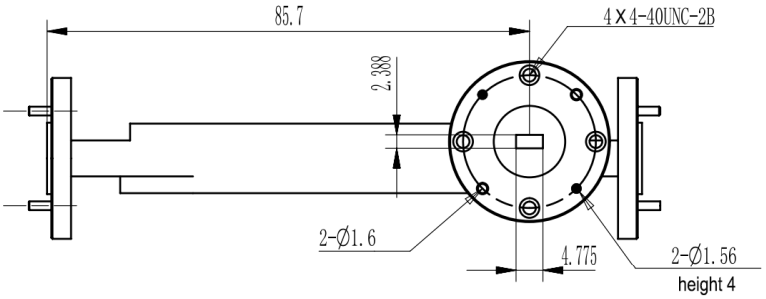

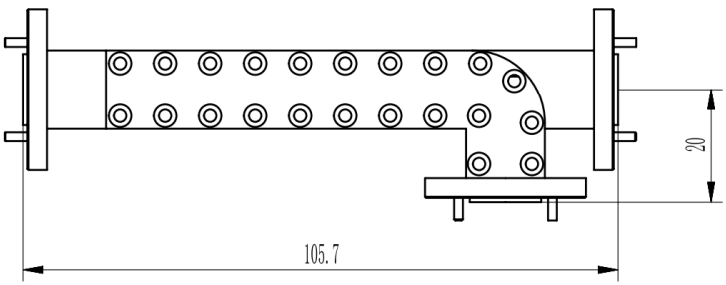

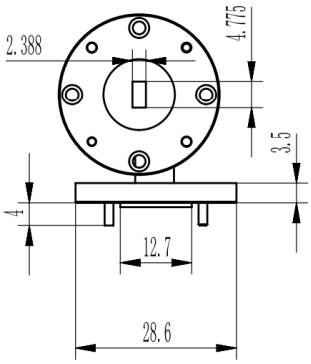

Waveguide Broadwall Directional Coupler DCW19-40



40dB, WR19, 39.2-59.6 GHz, Round Cover Flange, WR19 Coupled Port

Typical Test Data

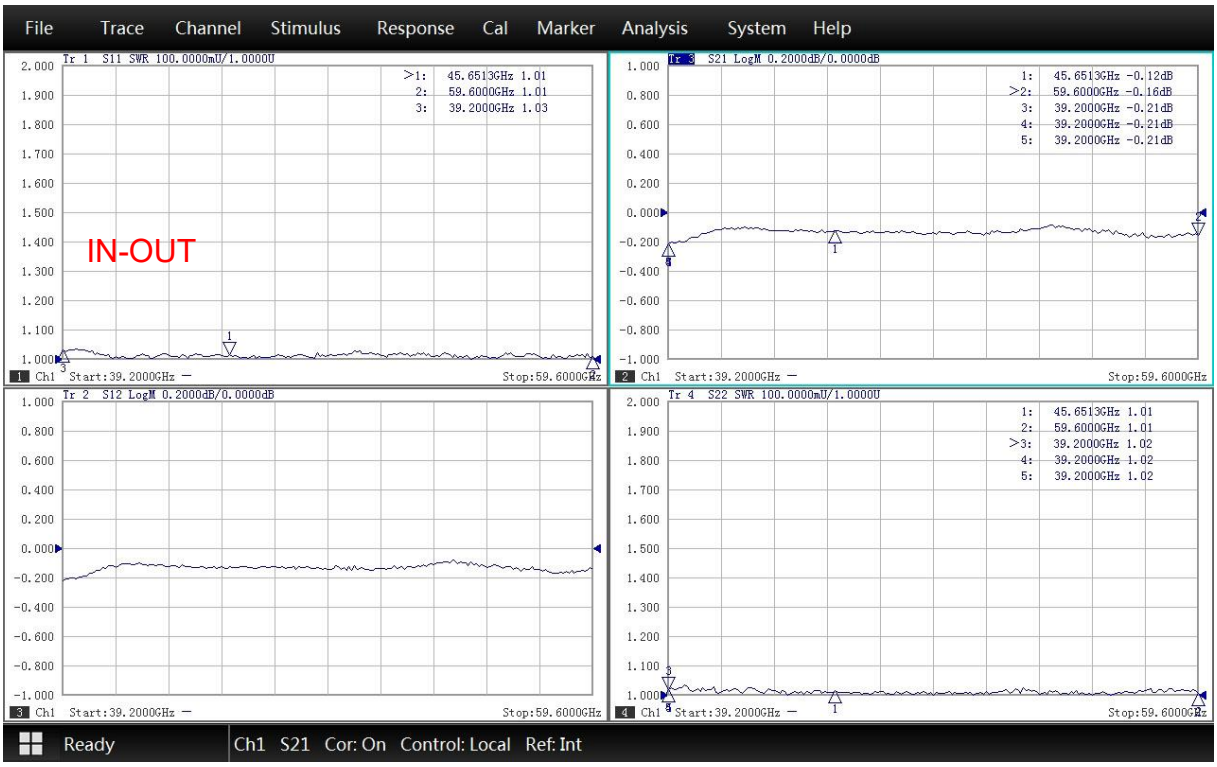



Waveguide Broadwall Directional Coupler DCW19-40



40dB, WR19, 39.2-59.6 GHz, Round Cover Flange, WR19 Coupled Port

