Waveguide Broadwall Directional Coupler DCW2224F-30

30dB, WR22, 32.9-50 GHz, Round Cover Flange, 2.4mm Female Coupled Port

Electrical

Frequency Range	32.9-50 GHz
VSWR	1.1 max(Main line), 1.4 max (Secondary line)
Coupling	30 ± 1.2 dB
Directivity	25 dB min
Insertion Loss	0.5 dB max
Operating Temperature	-40℃~+70℃

Mechanical

Waveguide Size	WR22(R400)
Flange Type	UG383/U
Flange Material and plating	Cu alloy, gold plated
Body Material and Plating	Cu alloy, gold plated
Net Weight	Approx 130g

Dimensions(mm)

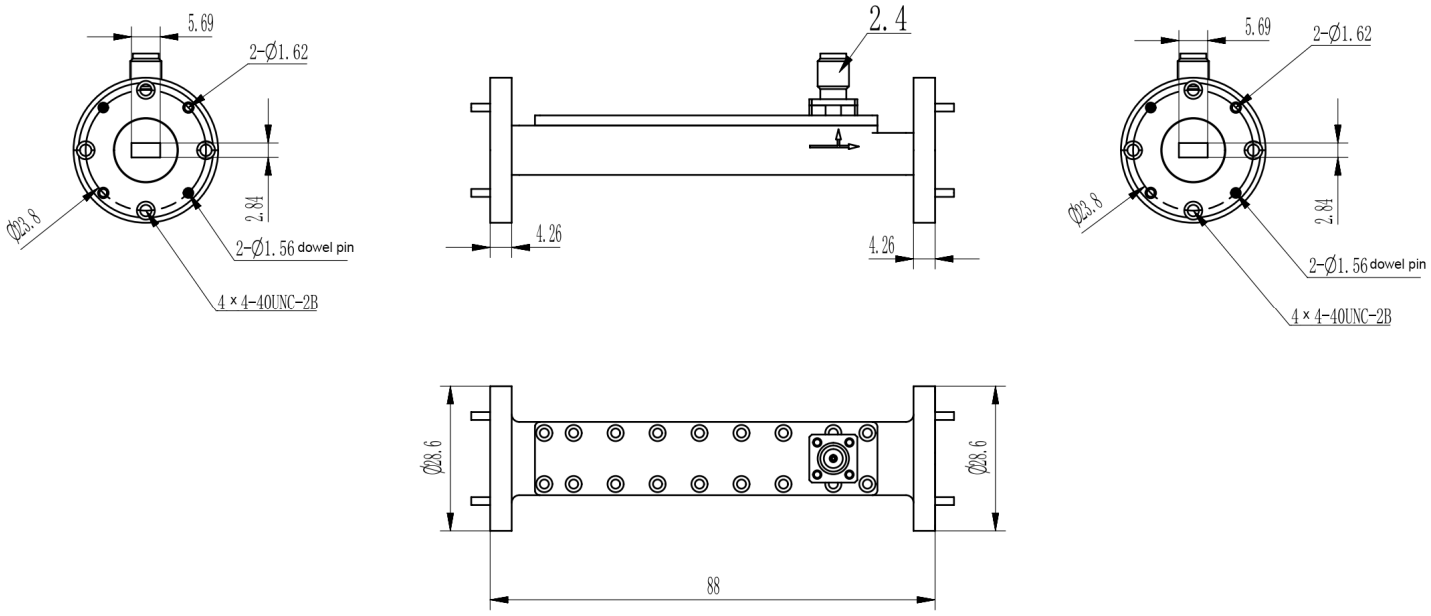

Waveguide Broadwall Directional Coupler DCW2224F-30

30dB, WR22, 32.9-50 GHz, Round Cover Flange, 2.4mm Female Coupled Port

Typical Test Data





Waveguide Broadwall Directional Coupler DCW2224F-30

30dB, WR22, 32.9-50 GHz, Round Cover Flange, 2.4mm Female Coupled Port

