HR15-25

25 dBi Gain, 49.8-75.8 GHz, WR15 Standard Gain Horn with UG385/U Flange

Electrical

Frequency Range	49.8-75.8 GHz
Norminal Gain	25 dBi
Polarization	Linear
VSWR	1.2 max
3dB Beamwidth	H-Plane: 7.6~10.7 deg, E-Plane: 7.3~10.9 deg
Operating Temperature	-40℃~+70℃

Note: Measured pattern data is not provided by default. CST simulated data & VSWR measurement available.

Mechanical

Waveguide Size	WR15
Flange Type	UG385/U Round Cover Flange
Body Material and Finish	Copper, painting over gold plating

Dimensions(mm)

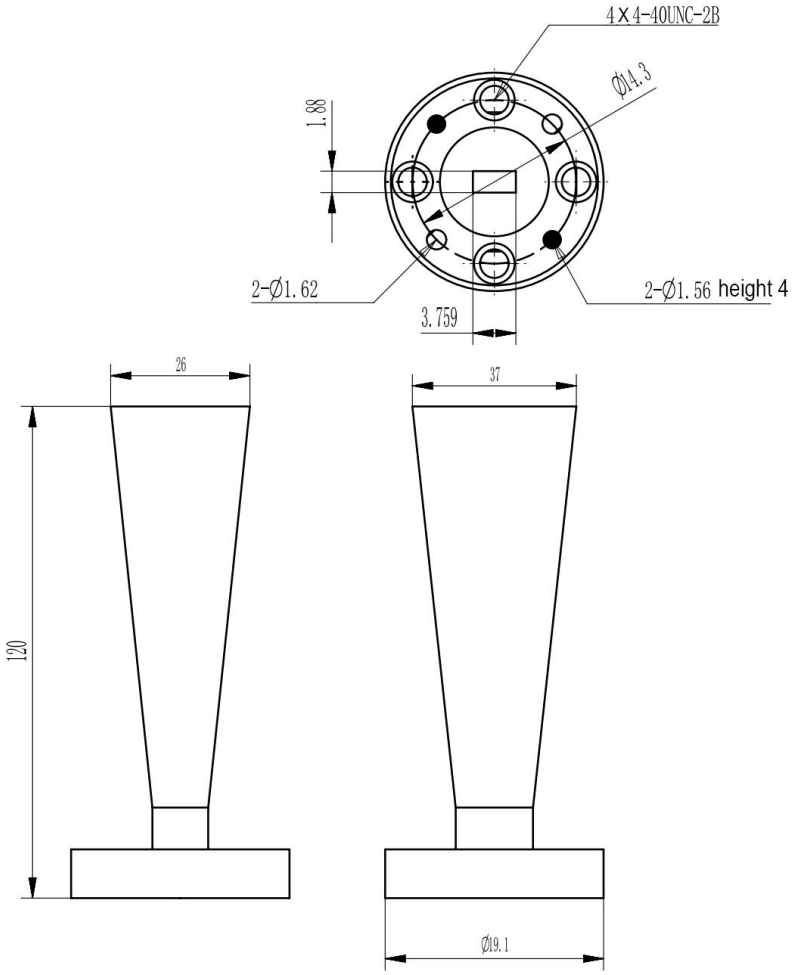

Simulated Antenna Patterns

49.8GHz H-Plane

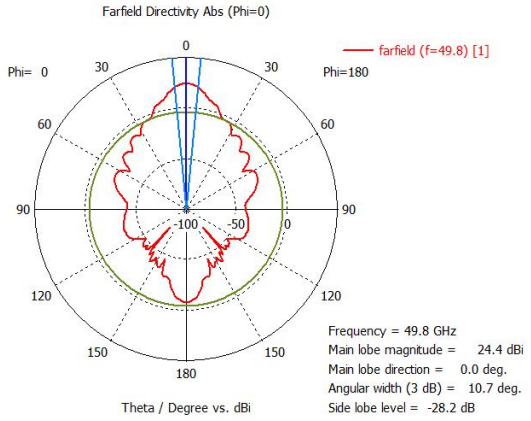

Frequency = 49.8 GHz
Main lobe magnitude = 24.4 dBi
Main lobe direction = 0.0 deg.
Angular width (3 dB) = 10.7 deg.
Side lobe level = -28.2 dB

E-Plane

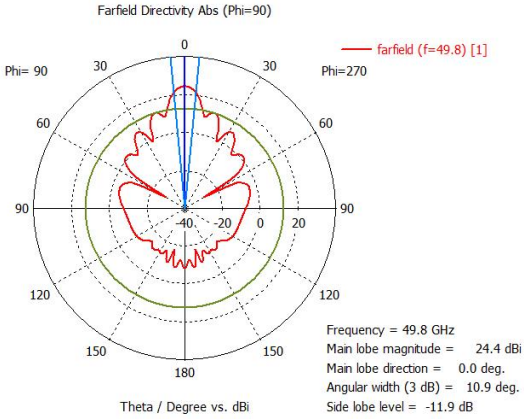

Frequency = 49.8 GHz
Main lobe magnitude = 24.4 dBi
Main lobe direction = 0.0 deg.
Angular width (3 dB) = 10.9 deg.
Side lobe level = -11.9 dB

78.8GHz H-Plane

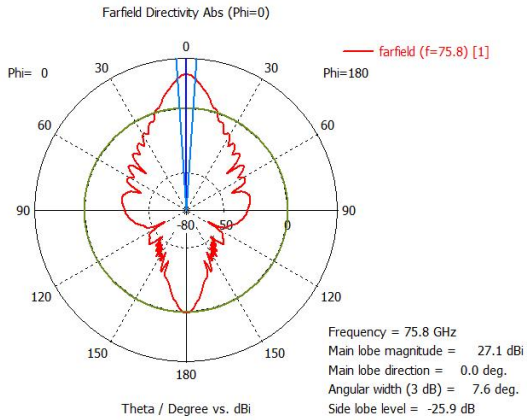

Frequency = 75.8 GHz
Main lobe magnitude = 27.1 dBi
Main lobe direction = 0.0 deg.
Angular width (3 dB) = 7.6 deg.
Side lobe level = -25.9 dB

E-Plane

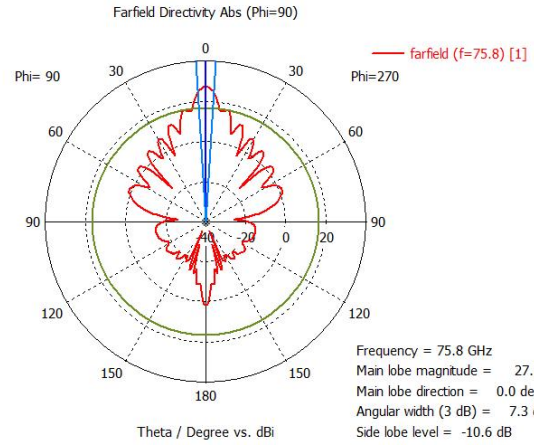

Frequency = 75.8 GHz
Main lobe magnitude = 27.1 dBi
Main lobe direction = 0.0 deg.
Angular width (3 dB) = 7.3 deg.
Side lobe level = -10.6 dB