HR22-20



20 dBi Gain, 32.9-50.1 GHz, WR22 Standard Gain Horn with UG383/U Flange

Electrical

Frequency Range	32.9-50.1 GHz
Norminal Gain	20 dBi
Polarization	Linear
VSWR	1.2 max
Operating Temperature	-40℃~+70℃

Note: Measured pattern data is not provided by default. CST simulated data & VSWR measurement available.

Mechanical

Waveguide Size	WR22
Flange Type	UG383/U Round Cover Flange
Body Material and Finish	Copper, painting over gold plating
Net Weight	60g

Dimensions(mm)

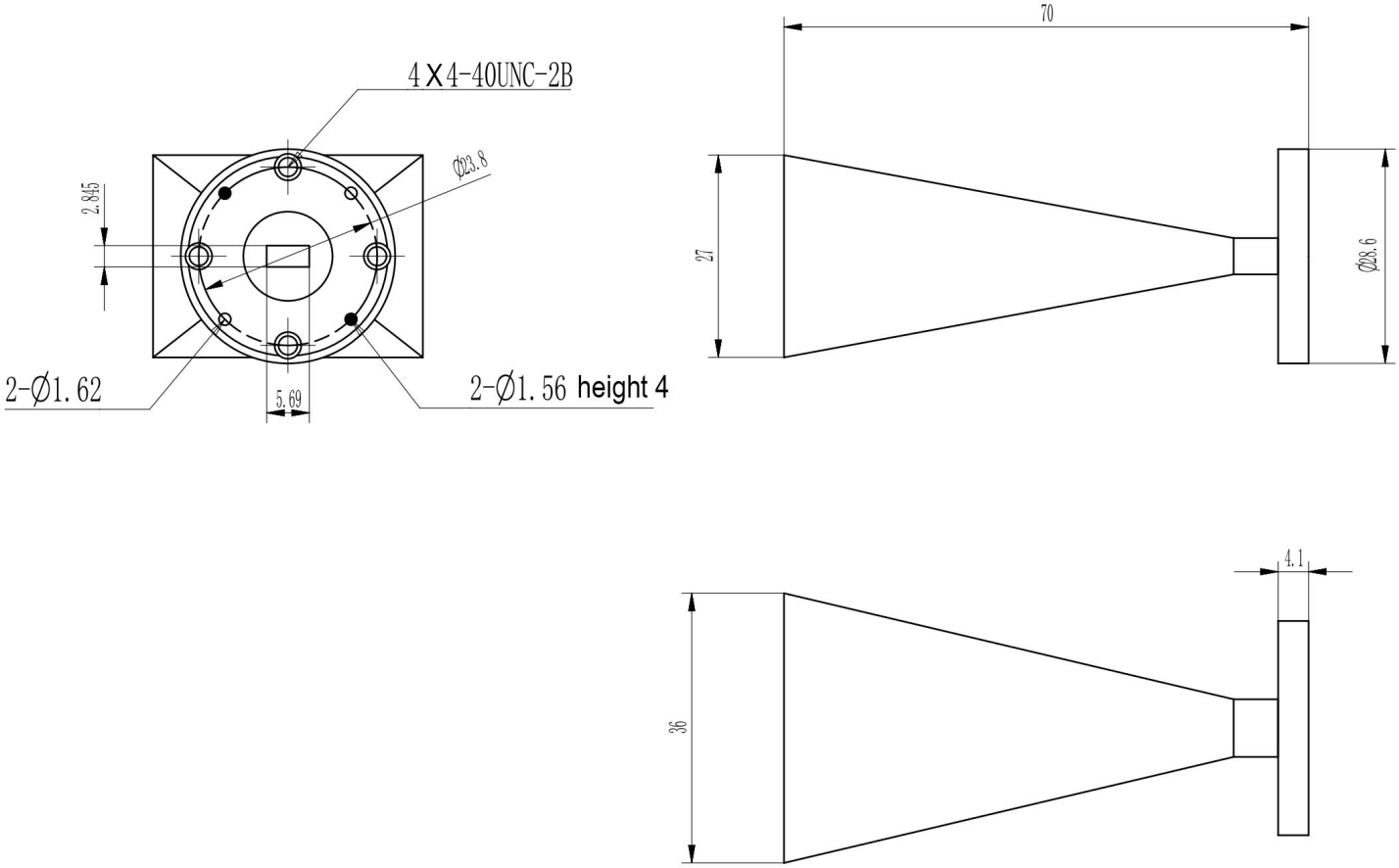

Typical VSWR

