

Waveguide Broadwall Directional Coupler DCW90-20

20dB, WR90, 8.2-12.5 GHz, Square Cover Flange, WR90 Coupled Port

Electrical

Frequency Range	8.2-12.5 GHz
VSWR	1.10 max(Main line), 1.3 max (Secondary line)
Coupling	20 ± 1 dB
Directivity	30 dB min
Operating Temperature	-40℃~+70℃

Mechanical

Waveguide Size	WR90(R100)
Flange Type	IEC: UBR100
Flange Material and plating	Aluminum, Conductive oxidation
Body Material and Plating	Aluminum, Painted

Dimensions(mm)

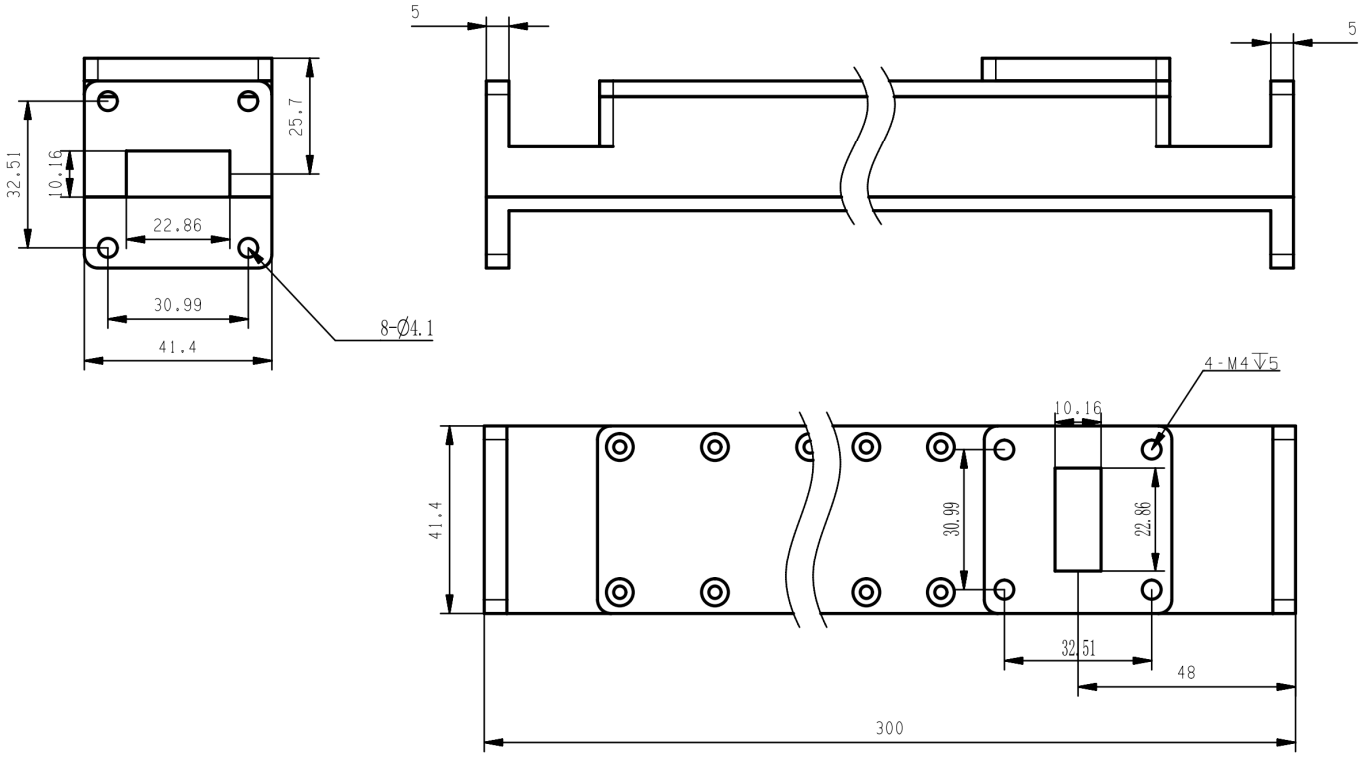

Waveguide Broadwall Directional Coupler DCW90-20



20dB, WR90, 8.2-12.5 GHz, Square Cover Flange, WR90 Coupled Port

---

Typical Test Data

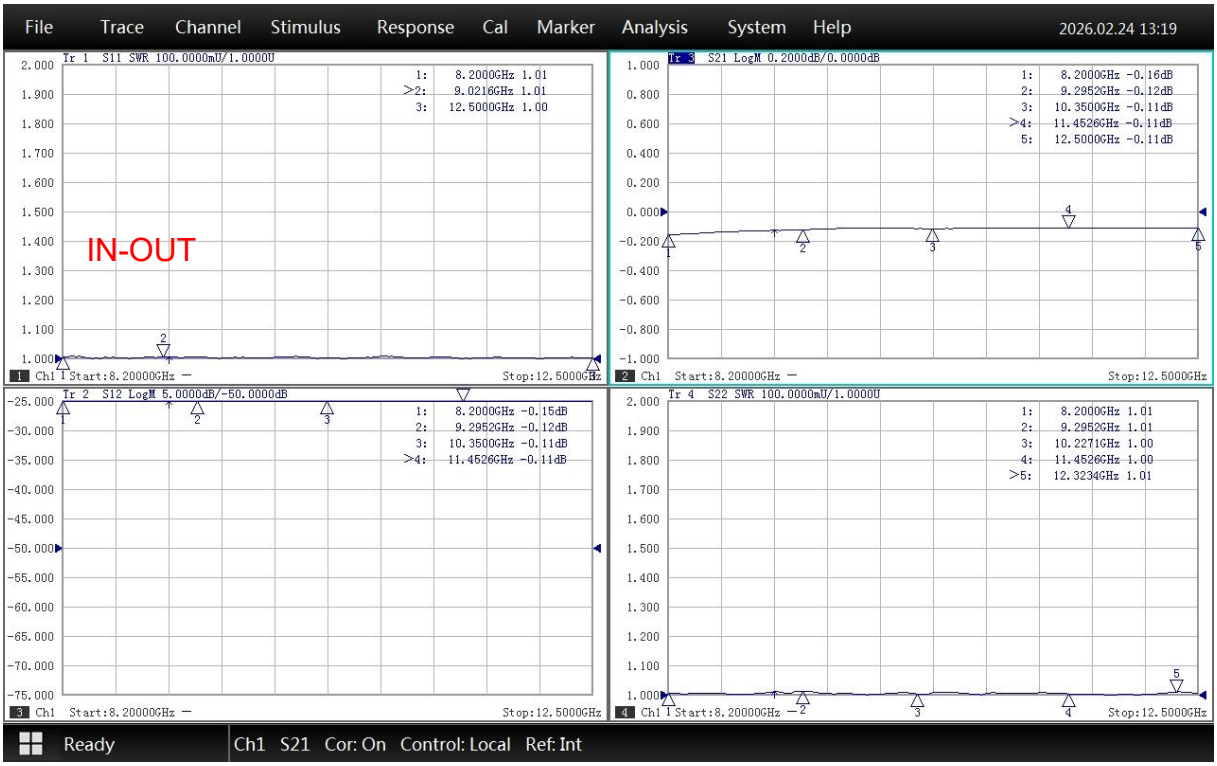



Waveguide Broadwall Directional Coupler

DCW90-20



