Waveguide Broadwall Directional Coupler DCW62292F-20



20dB, WR62, 11.9-18 GHz, Square Cover Flange, 2.92mm Female Coupled Port

---

Electrical

Frequency Range	11.9-18 GHz
VSWR	1.10 max(Main line), 1.25 max (Secondary line)
Coupling	20 ± 1.5 dB
Directivity	30 dB min
Operating Temperature	-40℃~+70℃

Mechanical

Waveguide Size	WR62(R140)
Flange Type	IEC: UBR140
Flange Material and plating	Aluminum, Conductive oxidation
Body Material and Plating	Aluminum, Painted
Coupled Port	2.92mm Female

Dimensions(mm)

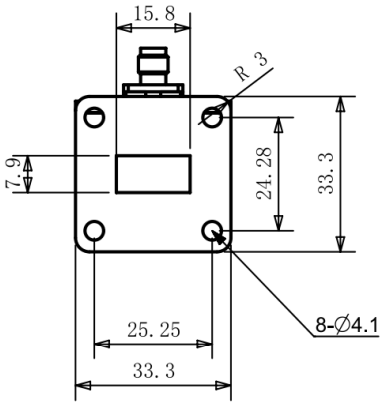

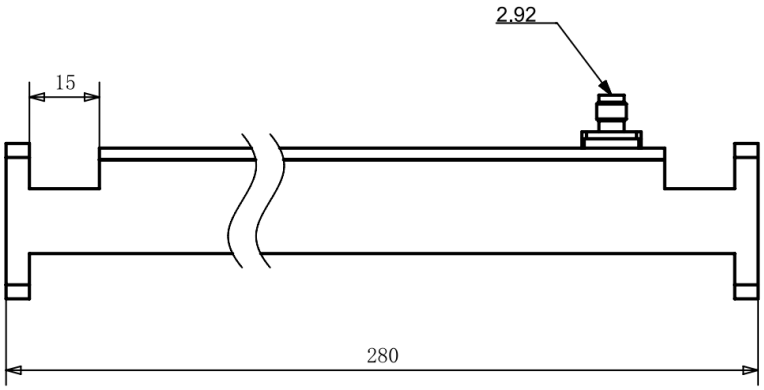

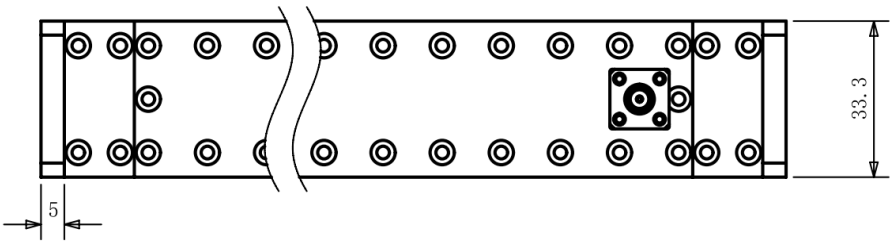



Waveguide Broadwall Directional Coupler DCW62292F-20

20dB, WR62, 11.9-18 GHz, Square Cover Flange, 2.92mm Female Coupled Port

Typical Test Data



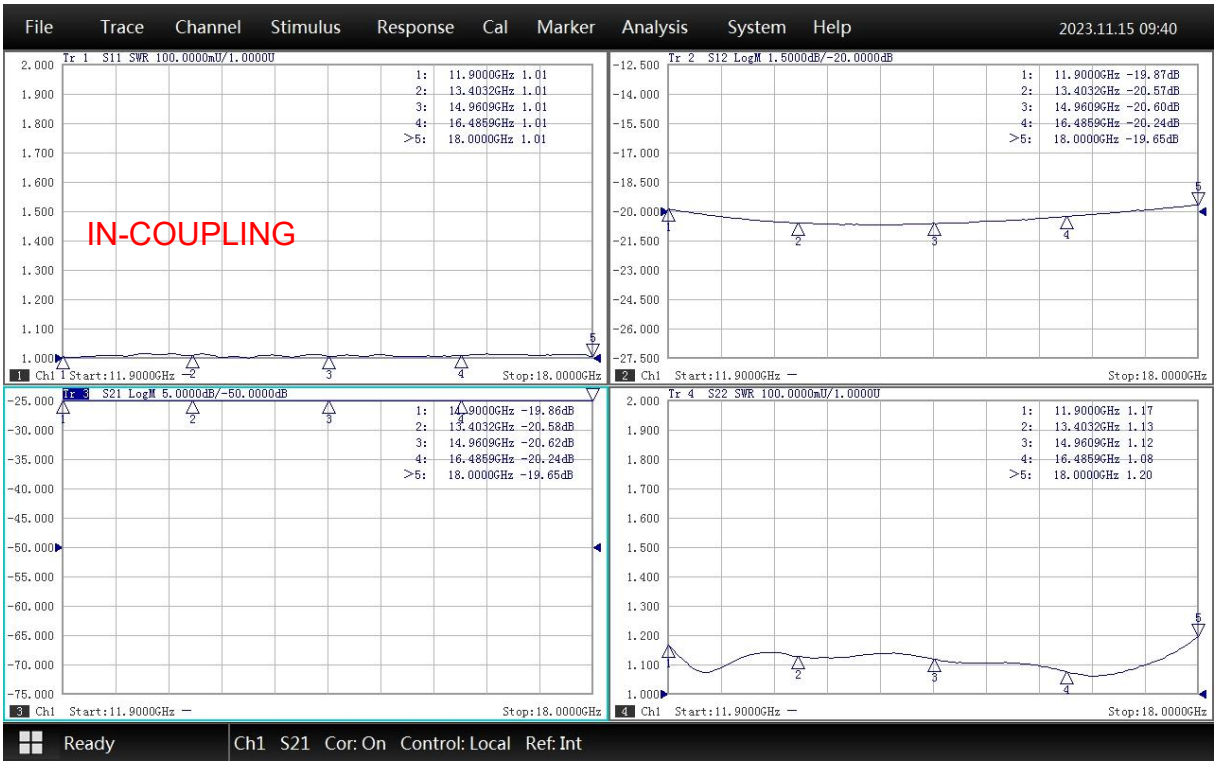



Waveguide Broadwall Directional Coupler DCW62292F-20

20dB, WR62, 11.9-18 GHz, Square Cover Flange, 2.92mm Female Coupled Port

