HR28-15

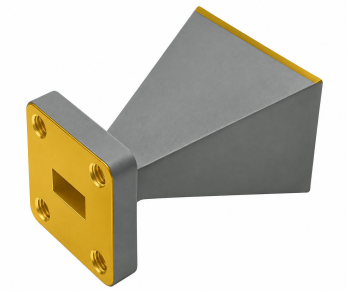

15 dBi Gain, 26.3-40 GHz, WR28 Standard Gain Horn with UBR320 Flange

Electrical

Frequency Range	26.3-40 GHz
Norminal Gain	15 dBi
Polarization	Linear
VSWR	1.2 max
Operating Temperature	-40℃~+70℃

Note: Measured pattern data is not provided by default. CST simulated data & VSWR measurement available.

Mechanical

Waveguide Size	WR28
Flange Type	UBR320 Square Cover Flange
Body Material and Finish	Copper, Painted

Dimensions(mm)

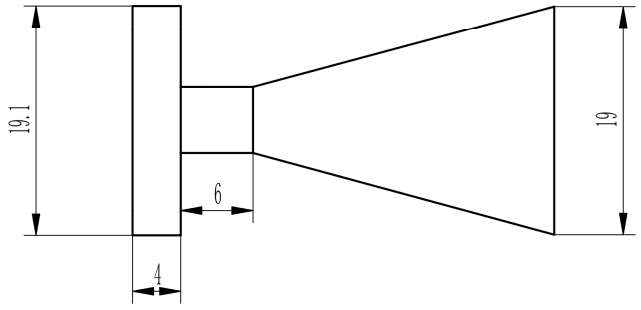

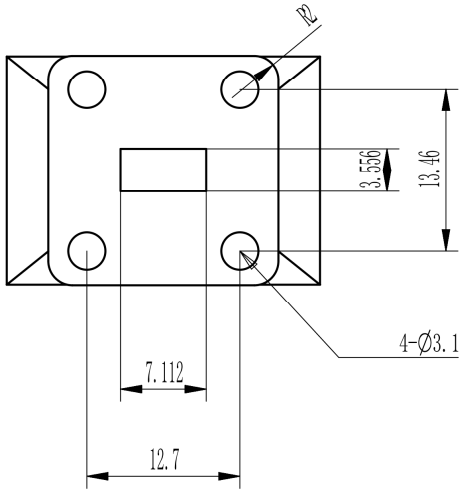

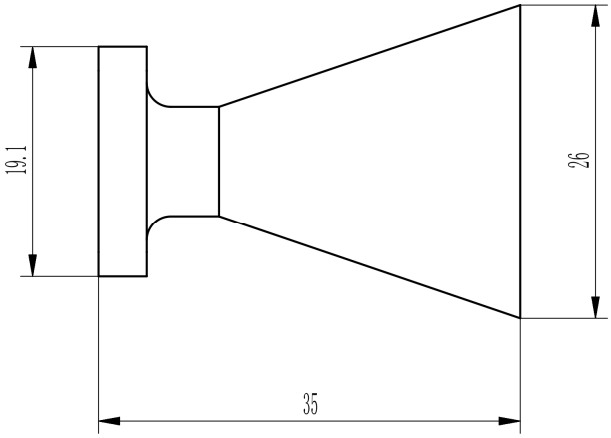

15 dBi Gain, 26.3-40 GHz, WR28 Standard Gain Horn with UBR320 Flange

Typical Test Data

