HR10-15

15 dBi Gain, 73.8-110 GHz, WR10 Standard Gain Horn with UG387/U-Mod Flange

Electrical

Frequency Range	73.8-110 GHz
Norminal Gain	15 dBi
Polarization	Linear
VSWR	1.2 max
3dB Beamwidth	H-Plane: 19.1~28.7 deg, E-Plane: 20.5~30.6 deg
Operating Temperature	-40℃~+70℃

Note: Measured pattern data is not provided by default. CST simulated data & VSWR measurement available.

Mechanical

Waveguide Size	WR10
Flange Type	UG387/U-Mod Round Cover Flange
Body Material and Finish	Copper, Gold Plated

Dimensions(mm)

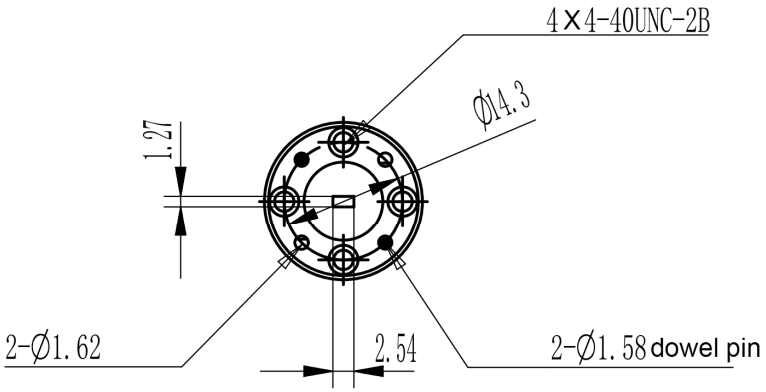

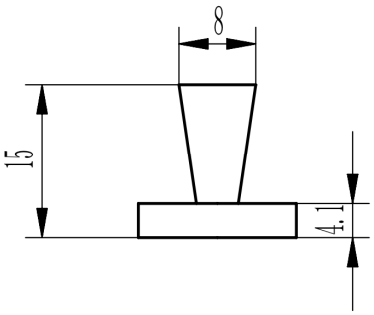

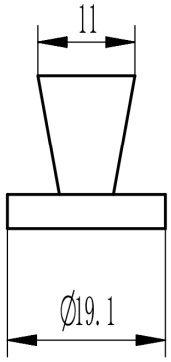

Simulated Antenna Patterns

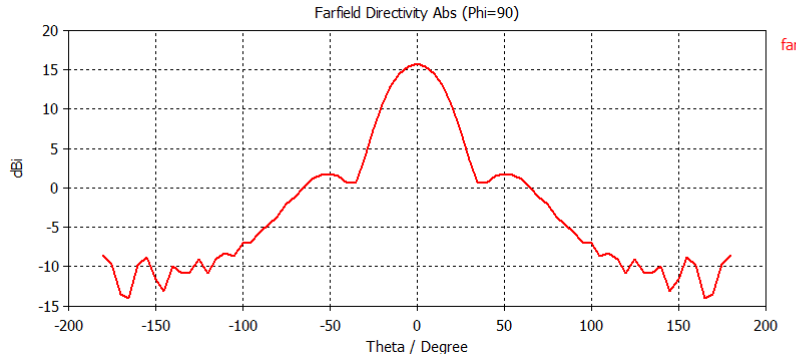

Frequency = 73.8
Main lobe magnitude = 15.7 dBi
Main lobe direction = 180.0 deg.
Angular width (3 dB) = 30.6 deg.
Side lobe level = -13.9 dB

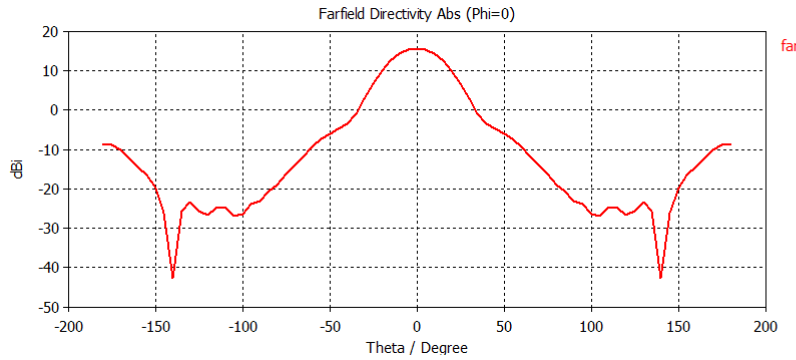

Frequency = 73.8
Main lobe magnitude = 15.7 dBi
Main lobe direction = 180.0 deg.
Angular width (3 dB) = 28.7 deg.
Side lobe level = -24.3 dB

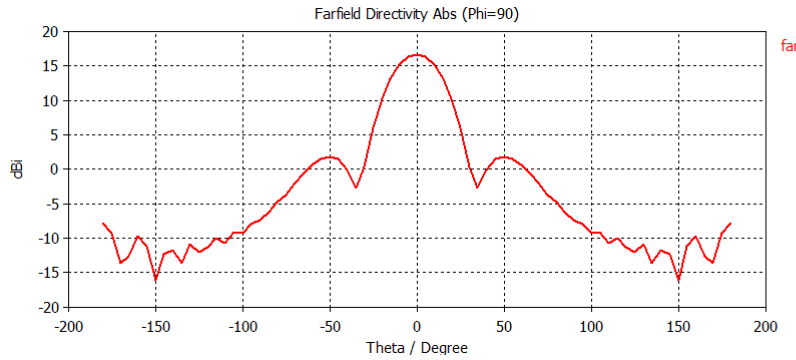

Frequency = 80
Main lobe magnitude = 16.7 dBi
Main lobe direction = 180.0 deg.
Angular width (3 dB) = 27.5 deg.
Side lobe level = -14.8 dB

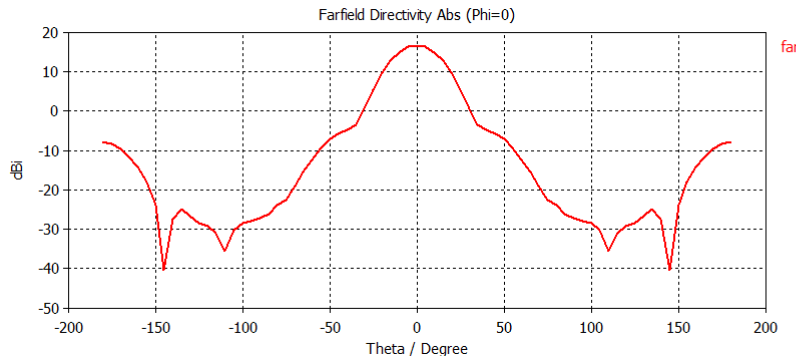

Frequency = 80
Main lobe magnitude = 16.7 dBi
Main lobe direction = 180.0 deg.
Angular width (3 dB) = 25.9 deg.
Side lobe level = -24.5 dB

Simulated Antenna Patterns

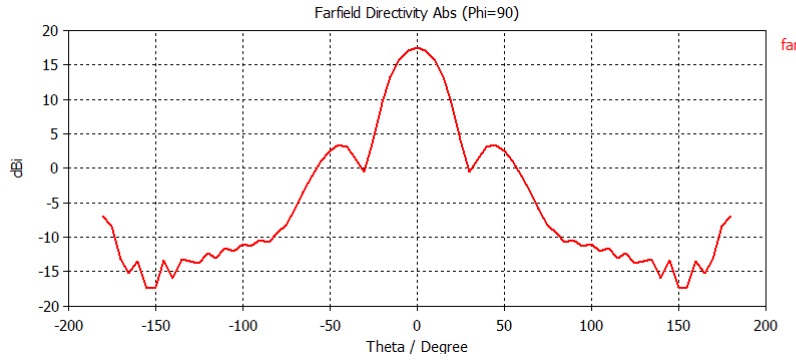

Frequency = 90
Main lobe magnitude = 17.5 dBi
Main lobe direction = 180.0 deg.
Angular width (3 dB) = 24.8 deg.
Side lobe level = -14.2 dB

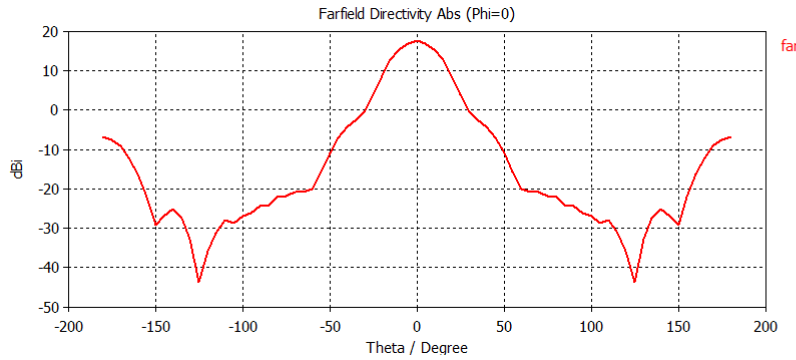

Frequency = 90
Main lobe magnitude = 17.5 dBi
Main lobe direction = 180.0 deg.
Angular width (3 dB) = 23.2 deg.
Side lobe level = -24.4 dB

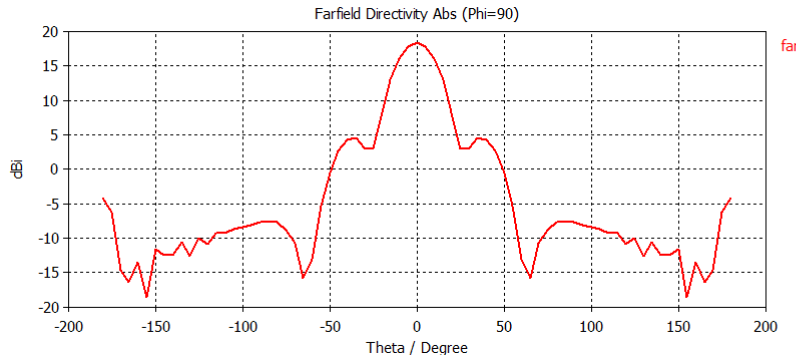

Frequency = 100
Main lobe magnitude = 18.4 dBi
Main lobe direction = 180.0 deg.
Angular width (3 dB) = 22.2 deg.
Side lobe level = -13.9 dB

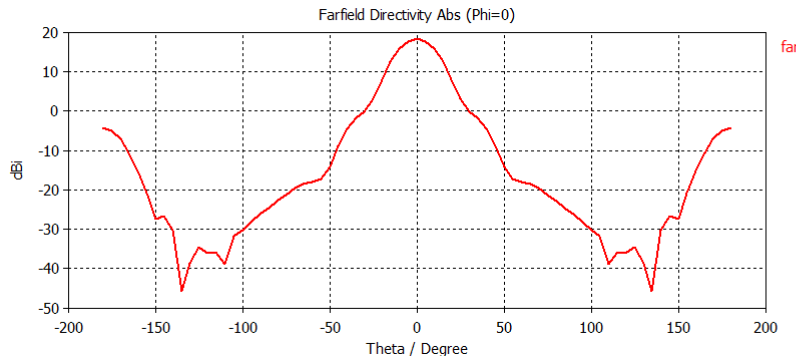

Frequency = 100
Main lobe magnitude = 18.4 dBi
Main lobe direction = 180.0 deg.
Angular width (3 dB) = 21.5 deg.
Side lobe level = -22.5 dB

Simulated Antenna Patterns

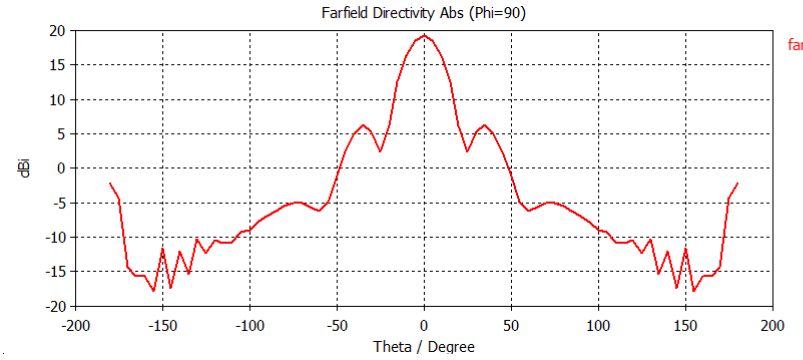

Frequency = 112
Main lobe magnitude = 19.2 dBi
Main lobe direction = 180.0 deg.
Angular width (3 dB) = 20.5 deg.
Side lobe level = -13.0 dB

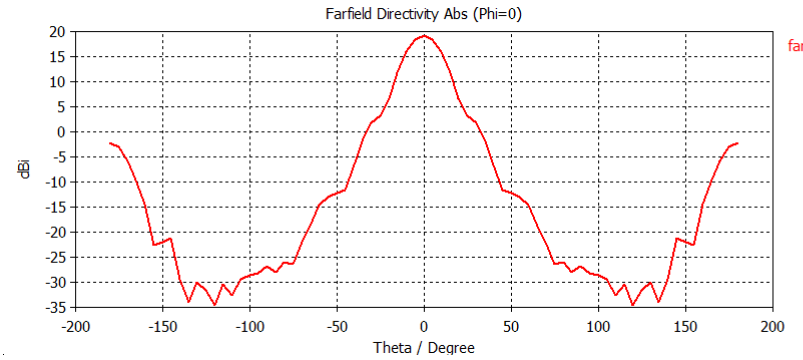

Frequency = 112
Main lobe magnitude = 19.2 dBi
Main lobe direction = 180.0 deg.
Angular width (3 dB) = 19.1 deg.
Side lobe level = -21.4 dB