ADPWR90N

WR90 to N Female Waveguide to Coaxial Adapter UBR100 Flange, Right Angle



Electrical

Frequency Range	8.2-12.5 GHz
VSWR	1.2 max

Configuration

Waveguide Size	IEC	R100
	EIA	WR90
Flange	IEC	UBR100
	North America	Al alloy: M3922/53-003(UG135/U) Cu alloy: M3922/53-001(UG39/U)
Coax Connector	N Female	
Body Geometry	Right Angle	

Mechanical & Environmental

Waveguide Body	Aluminum, conductive oxidation, anti-corrosive paint
Connector Body	Passivated stainless steel
Center Contact	Gold plated beryllium copper
Operating Temperature	-40℃ to +85℃
Connector Interface	MIL-STD-348
RoHS	Compliant under exemptions 6 (b) or 6 (c)
Net Weight	Approx 80g

Note

* Flange size may not be 100% identical with the above listed standards, but are compatible. Refer to the next page for comparison table.

* Paint in grey or black by default, other colors available.

ADPWR90N



WR90 to N Female Waveguide to Coaxial Adapter
UBR100 Flange, Right Angle

Dimensions(mm)

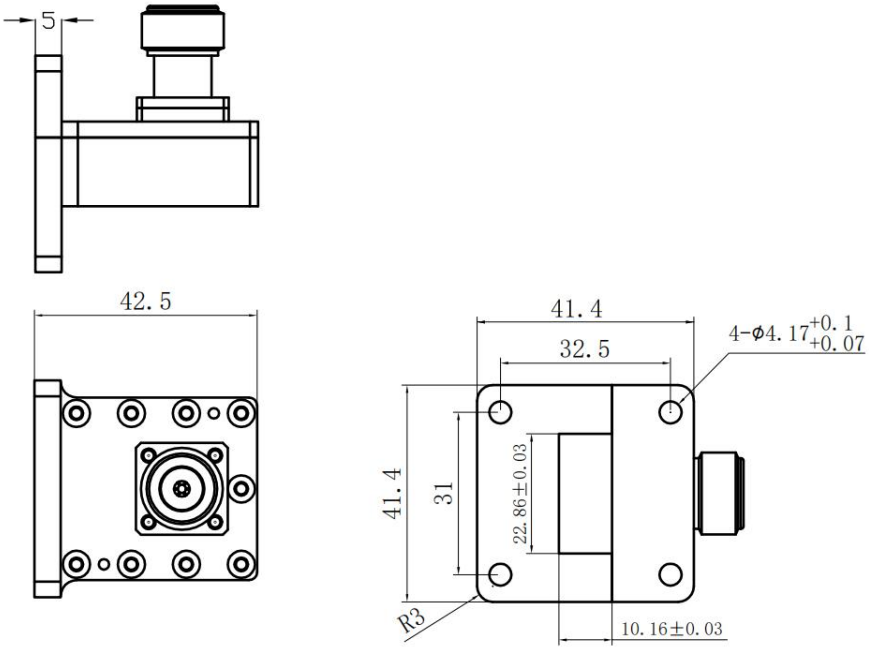

Flange Comparison (mm)

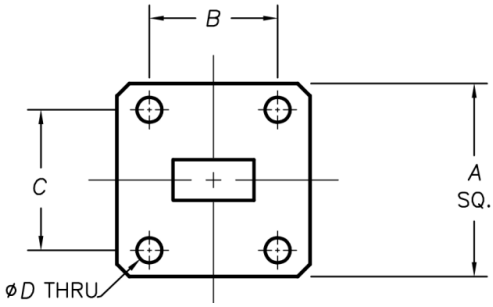

* The purpose of this comparison is to provide a quick reference of different flange standards. Great care has been given, nevertheless there might be a few mistakes.
* Please check the flange compatibility before ordering. Customized flanges are available.

WG SIZE	CONFORMING STANDARD	A	B	C	D
WR90	IEC60154:UBR100	41.40	30.98	32.52	4.1
	USA:MIL3922/53-003(UG135/U)	41.28	30.98	32.52	4.29

ADPWR90N



WR90 to N Female Waveguide to Coaxial Adapter

UBR100 Flange, Right Angle

Typical Test Data at 25℃

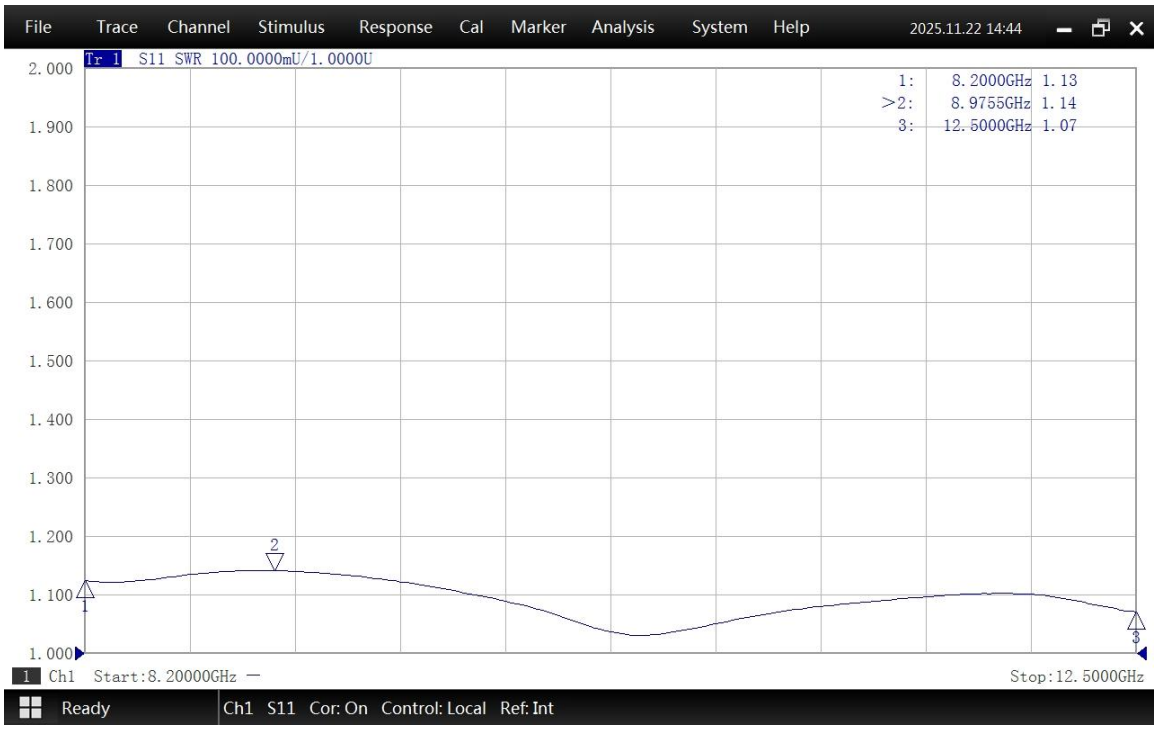

VSWR

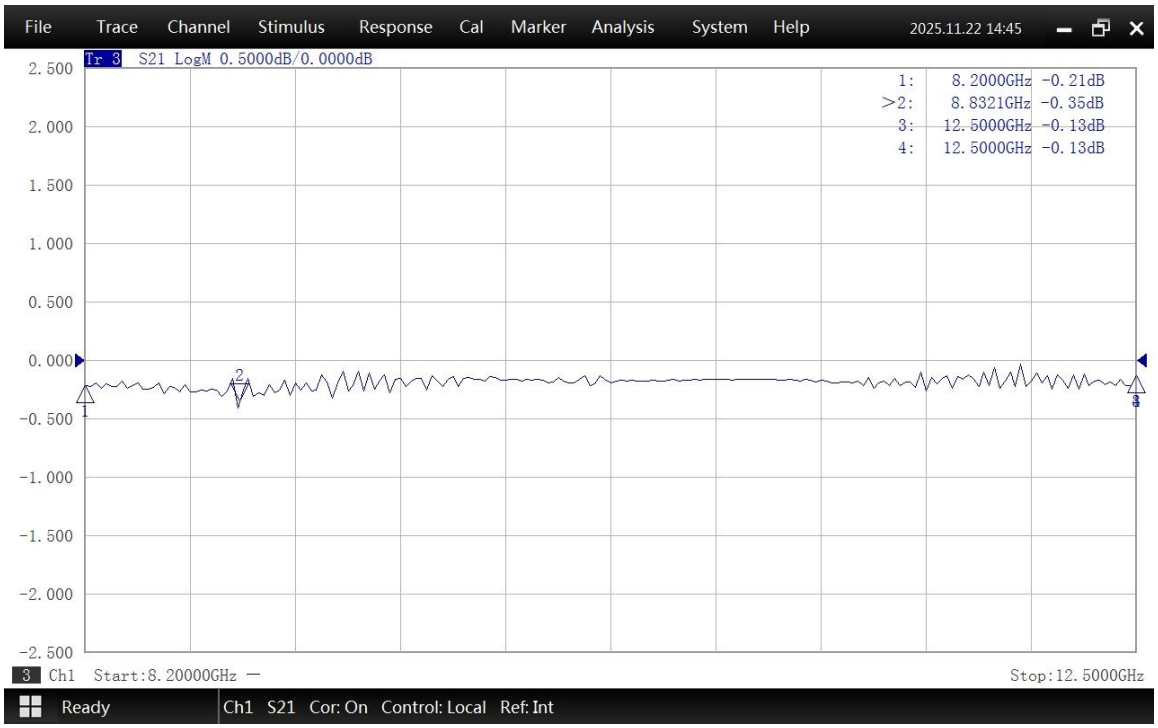

Insertion Loss*

* In Insertion Loss (IL) testing, adapters are measured back-to-back. To obtain the loss of a single adapter, divide the measured value by two.