ADPWR75T

WR75 to TNC Female Waveguide to Coaxial Adapter
UBR120 Flange, Right Angle

Electrical

Frequency Range	9.84-15 GHz
VSWR	1.25 max

Configuration

Waveguide Size	IEC	R120
	EIA	WR75
Flange	IEC	UBR120
	North America	Al alloy: MIL3922/70-025 Cu alloy: MIL3922/70-026
Coax Connector	TNC Female	
Body Geometry	Right Angle	

Mechanical & Environmental

Waveguide Body	Aluminum, conductive oxidation, anti-corrosive paint
Connector Body	Passivated stainless steel
Center Contact	Gold plated beryllium copper
Operating Temperature	-40℃ to +85℃
Connector Interface	MIL-STD-348
RoHS	Compliant under exemptions 6 (b) or 6 (c)
Net Weight	Approx 65g

Note

* Flange size may not be 100% identical with the above listed standards, but are compatible. Refer to the next page for comparison table.

* Paint in grey or black by default, other colors available.

ADPWR75T

WR75 to TNC Female Waveguide to Coaxial Adapter

UBR120 Flange, Right Angle

Dimensions(mm)

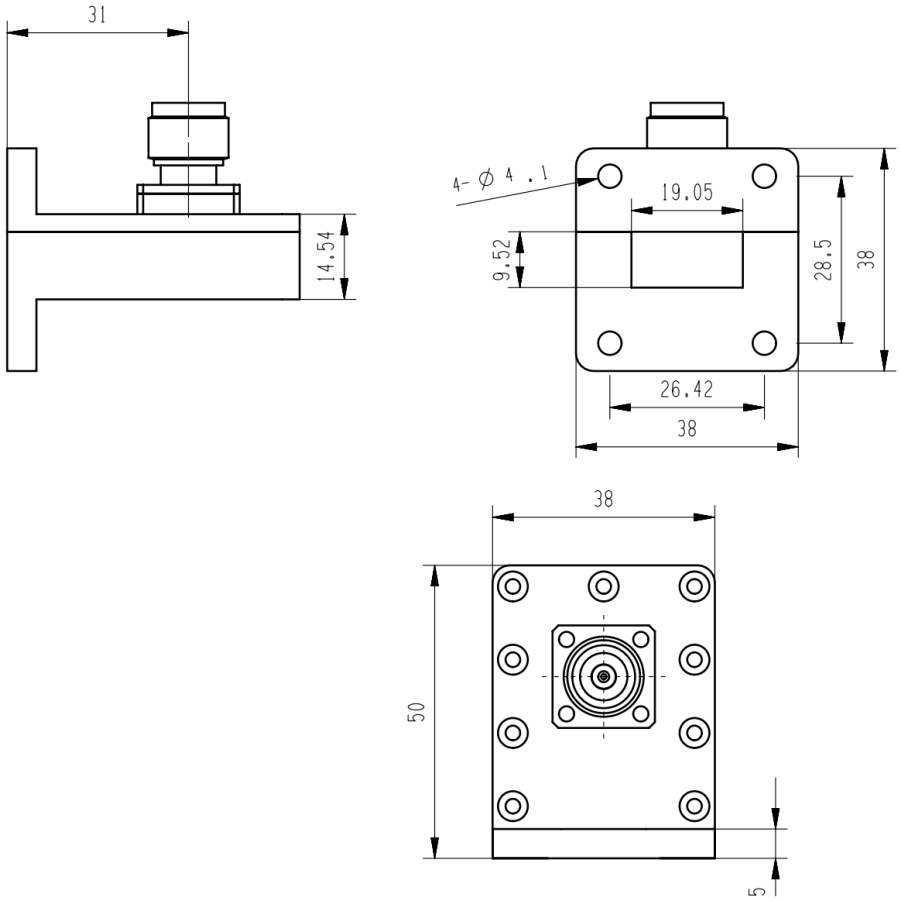

Flange Comparison (mm)

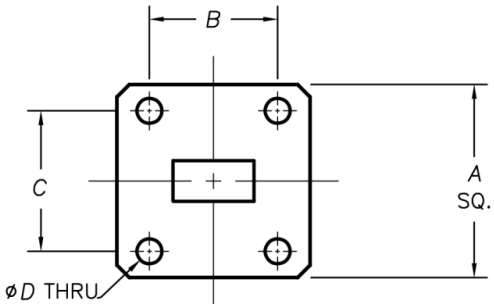

* The purpose of this comparison is to provide a quick reference of different flange standards. Great care has been given, nevertheless there might be a few mistakes.
* Please check the flange compatibility before ordering. Customized flanges are available.

WG SIZE	CONFORMING STANDARD	A	B	C	D
WR75	IEC60154:UBR120	38.10	26.42	28.5	4.00
	USA:MIL3922/70-026	38.10	26.42	28.5	3.70

ADPWR75T

WR75 to TNC Female Waveguide to Coaxial Adapter

UBR120 Flange, Right Angle

Typical Test Data at 25℃

