ADPWR62SMAG

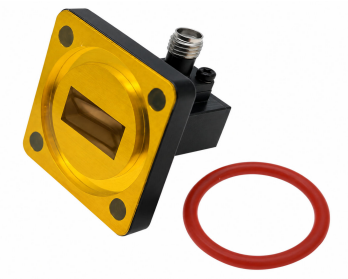

WR62 to SMA Female Waveguide to Coaxial Adapter
PBR140 Flange, Right Angle

Electrical

Frequency Range	11.9-18 GHz
VSWR	1.2 max

Configuration

Waveguide Size	IEC	R140
	EIA	WR62
Flange	IEC	PBR140
Coax Connector	SMA Female	
Body Geometry	Right Angle	

Mechanical & Environmental

Waveguide Body	Aluminum, conductive oxidation, anti-corrosive paint
Connector Body	Passivated stainless steel
Center Contact	Gold plated beryllium copper
Operating Temperature	-40℃ to +85℃
Connector Interface	MIL-STD-348
RoHS	Compliant under exemptions 6 (b) or 6 (c)
Net Weight	Approx 25g

Note

* Paint in grey or black by default, other colors available.

ADPWR62SMAG

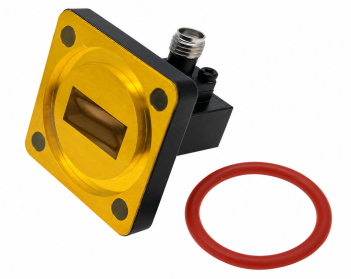

WR62 to SMA Female Waveguide to Coaxial Adapter

PBR140 Flange, Right Angle

Dimensions(mm)

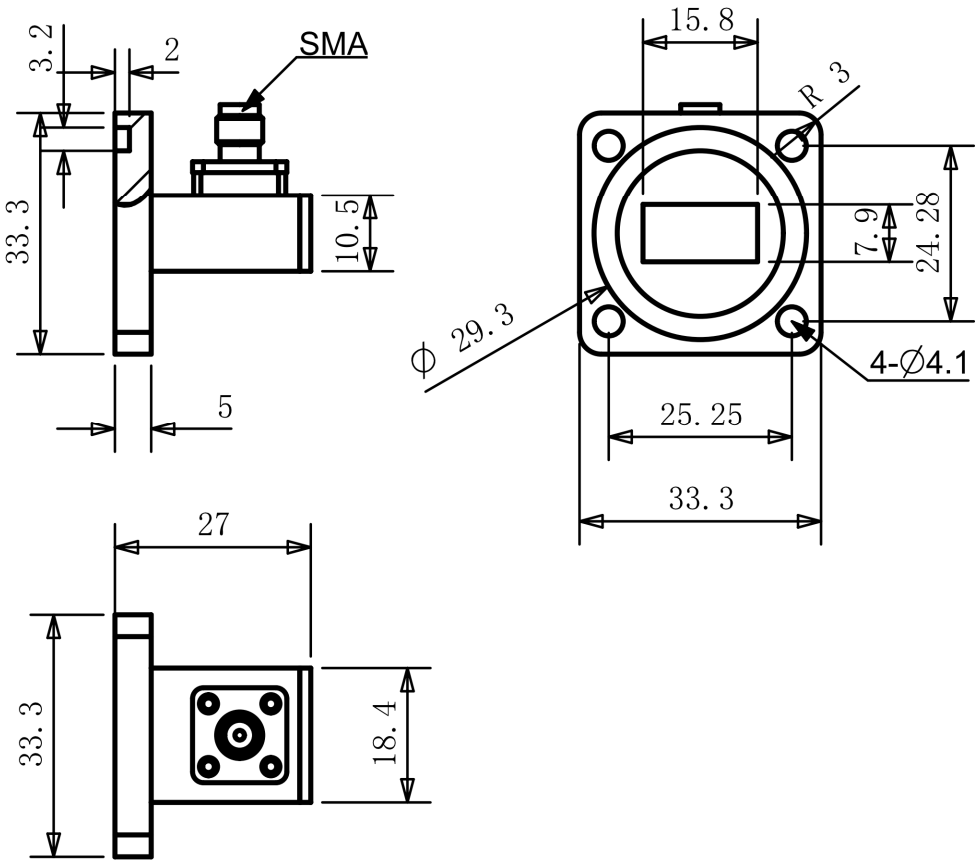

ADPWR62SMAG

WR62 to SMA Female Waveguide to Coaxial Adapter

PBR140 Flange, Right Angle

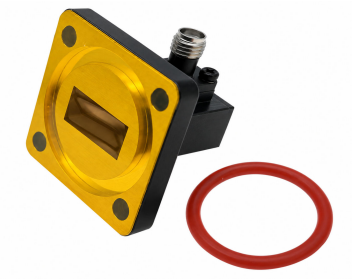

Typical Test Data at 25℃

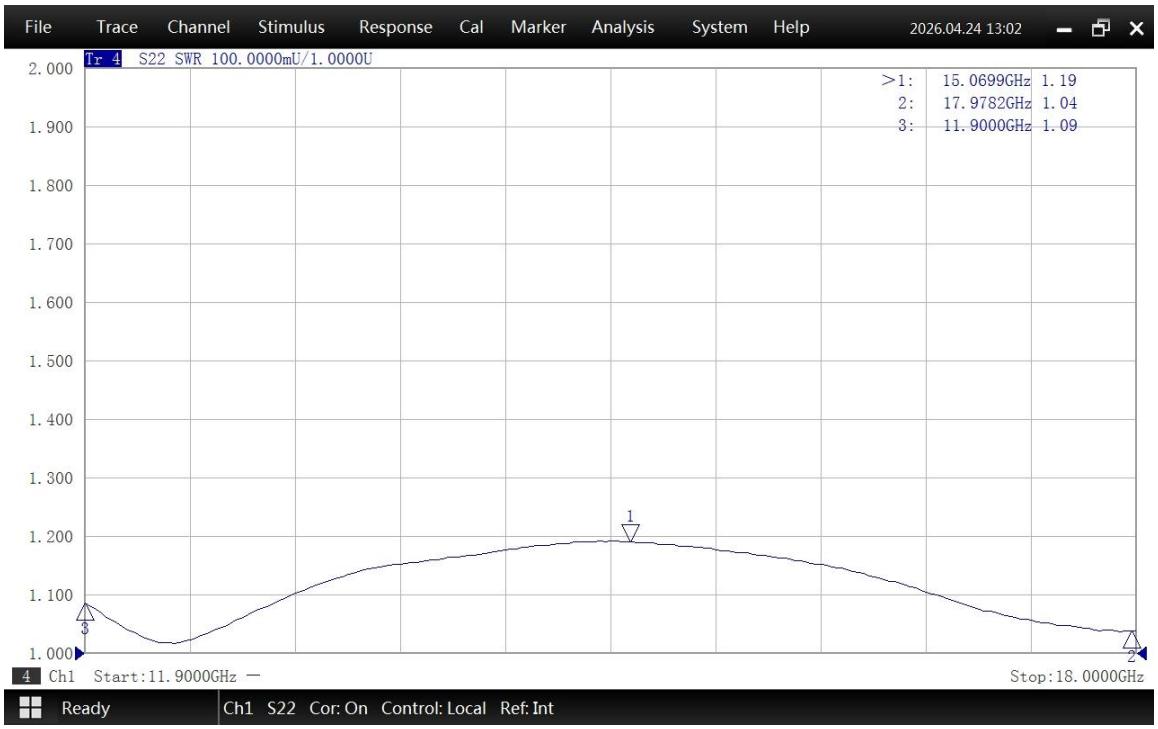

VSWR

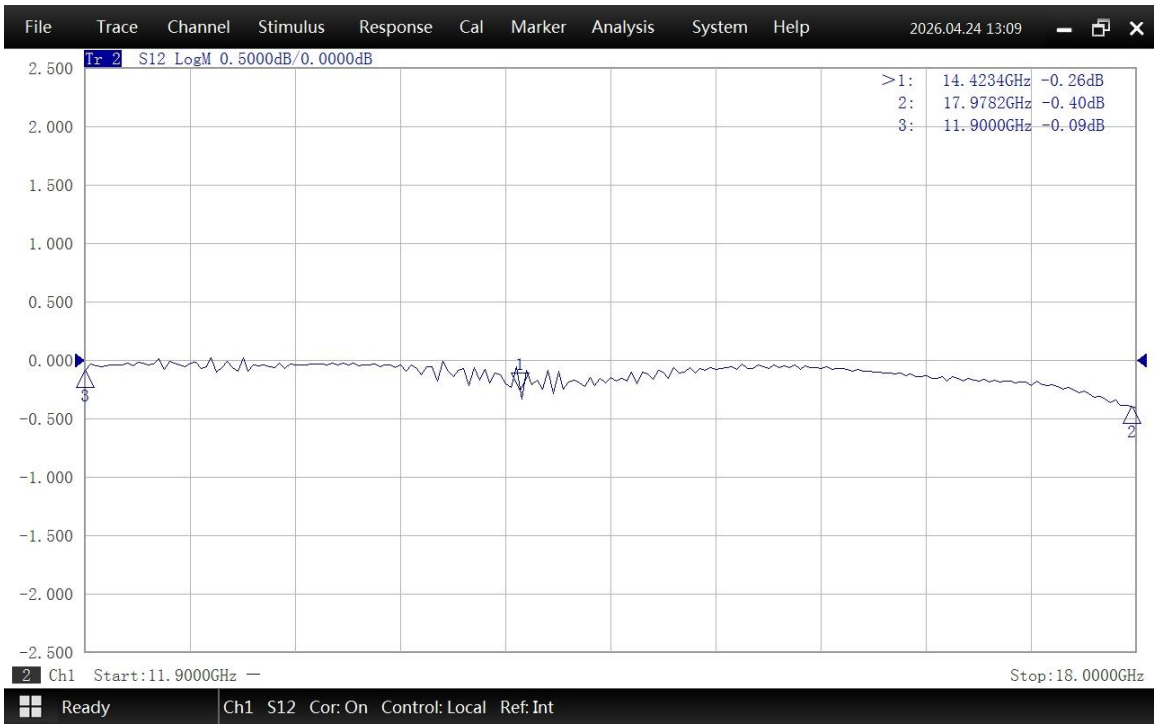

Insertion Loss*

* In Insertion Loss (IL) testing, adapters are measured back-to-back. To obtain the loss of a single adapter, divide the measured value by two.