ADPWR51SMAEL



WR51 to SMA Female Waveguide to Coaxial Adapter
UBR180 Flange, End Launch

Electrical

Frequency Range	14.5-22 GHz
VSWR	1.2 max

Configuration

Waveguide Size	IEC	R180
	EIA	WR51
Flange	UBR180	
Coax Connector	SMA Female	
Body Geometry	End Launch	

Mechanical & Environmental

Waveguide Body	Aluminum, conductive oxidation, anti-corrosive paint
Connector Body	Passivated stainless steel
Center Contact	Gold plated beryllium copper
Operating Temperature	-40℃ to +85℃
Connector Interface	MIL-STD-348
RoHS	Compliant under exemptions 6 (b) or 6 (c)
Net Weight	Approx 23g

Note

* Flange size may not be 100% identical with the above listed standards, but are compatible. Refer to the next page for comparison table.

* Paint in grey or black by default, other colors available.

ADPWR51SMAEL



WR51 to SMA Female Waveguide to Coaxial Adapter
UBR180 Flange, End Launch

Dimensions(mm)

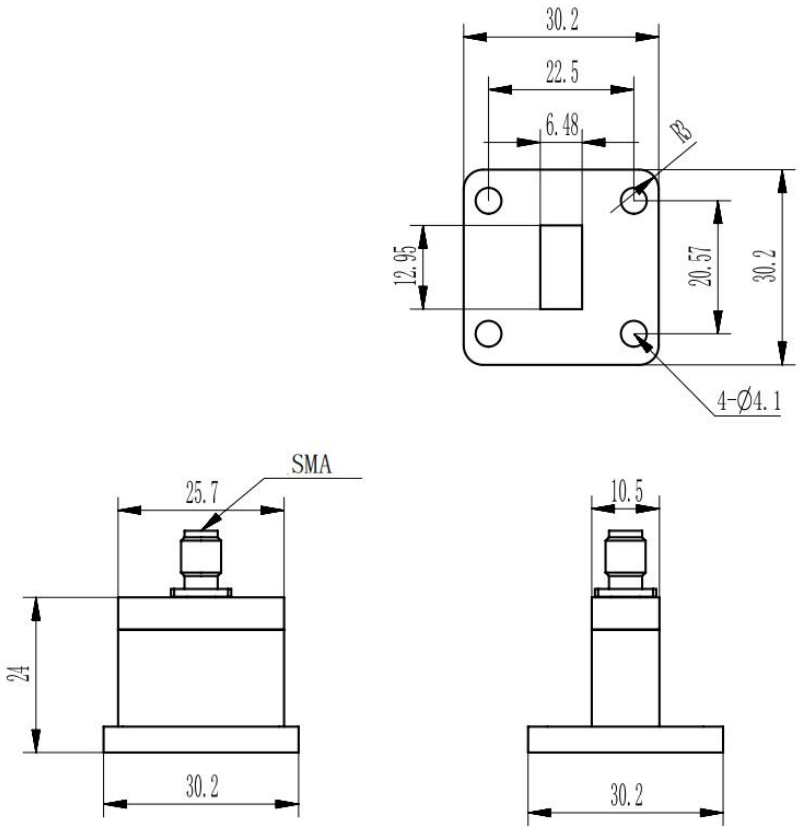

Flange Comparison (mm)

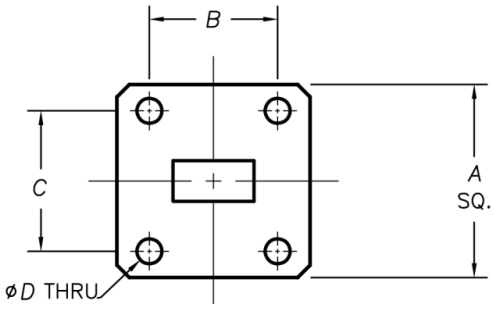

* The purpose of this comparison is to provide a quick reference of different flange standards. Great care has been given, nevertheless there might be a few mistakes.
* Please check the flange compatibility before ordering. Customized flanges are available.

WG SIZE	CONFORMING STANDARD	A	B	C	D
WR51	IEC60154:UBR180	30.10	20.57	22.5	4.00

ADPWR51SMAEL



WR51 to SMA Female Waveguide to Coaxial Adapter

UBR180 Flange, End Launch

Typical Test Data at 25℃

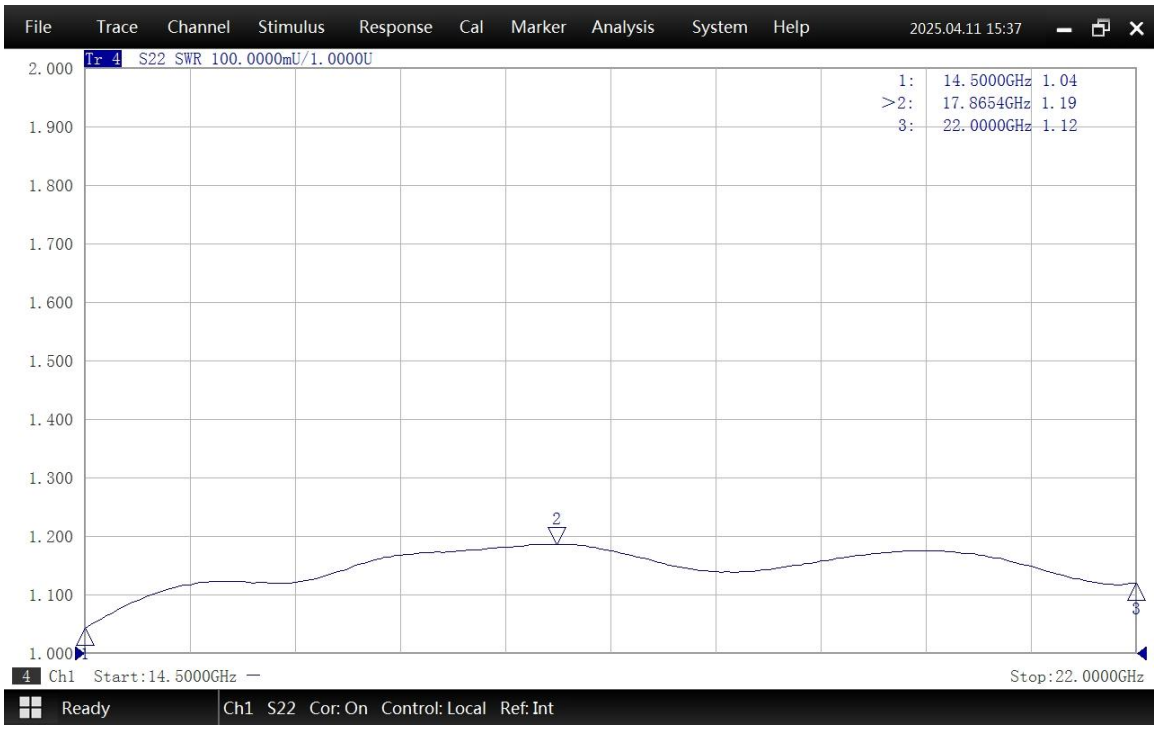

VSWR

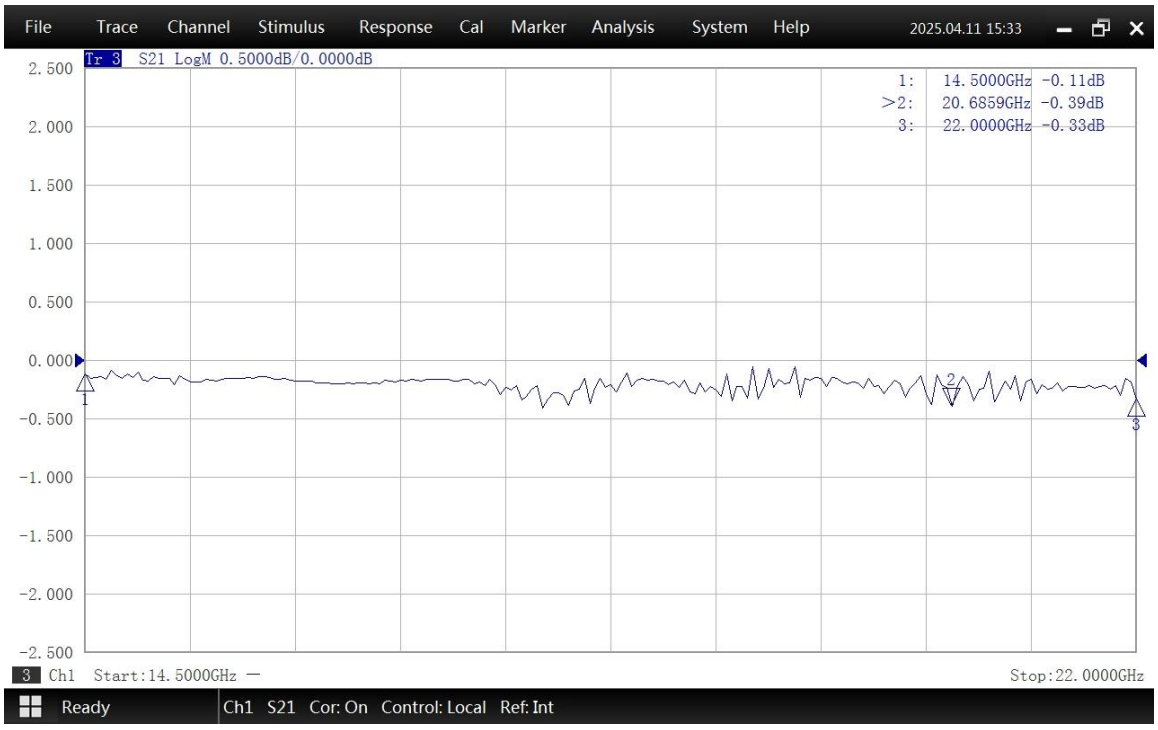

Insertion Loss*

* In Insertion Loss (IL) testing, adapters are measured back-to-back. To obtain the loss of a single adapter, divide the measured value by two.