ADPWR51NA



WR51 to N Female Waveguide to Coaxial Adapter MIL3922/70-023 Flange, RightAngle

Electrical

Frequency Range	14.5-18 GHz
VSWR	1.2 max

Configuration

Waveguide Size	IEC	R180
	EIA	WR51
Flange	MIL3922/70-023	
Coax Connector	N Female	
Body Geometry	Right Angle	

Mechanical & Environmental

Waveguide Body	Aluminum, conductive oxidation, anti-corrosive paint
Connector Body	Passivated stainless steel
Center Contact	Gold plated beryllium copper
Operating Temperature	-40℃ to +85℃
Connector Interface	MIL-STD-348
RoHS	Compliant under exemptions 6 (b) or 6 (c)
Net Weight	Approx 60g

Note

* Paint in grey or black by default, other colors available.

ADPWR51NA



WR51 to N Female Waveguide to Coaxial Adapter

MIL3922/70-023 Flange, Right Angle

Dimensions(mm)

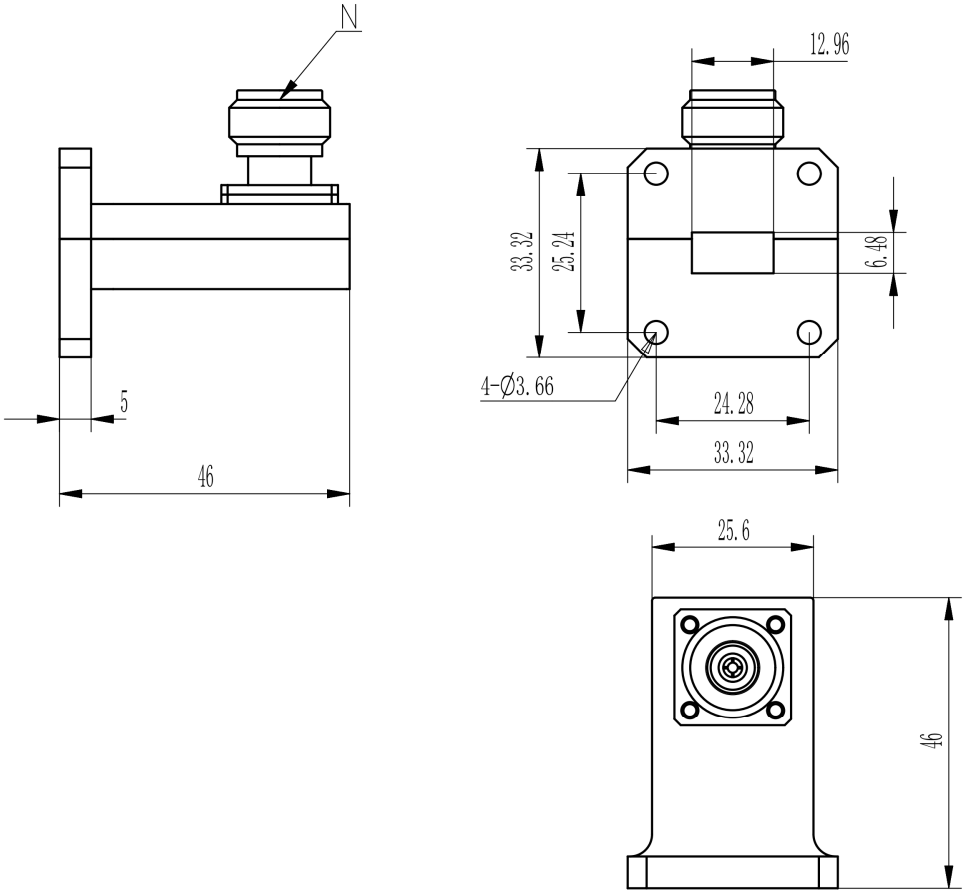

ADPWR51NA



WR51 to N Female Waveguide to Coaxial Adapter

MIL3922/70-023 Flange, Right Angle

Typical Test Data at 25℃

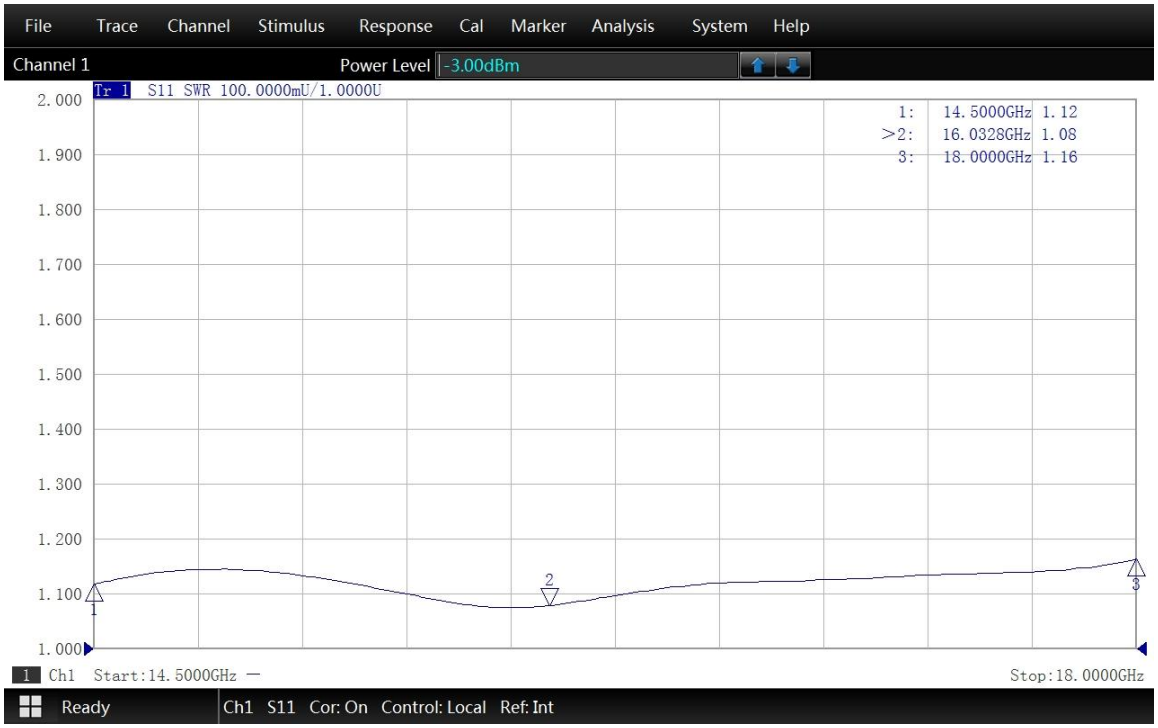

VSWR

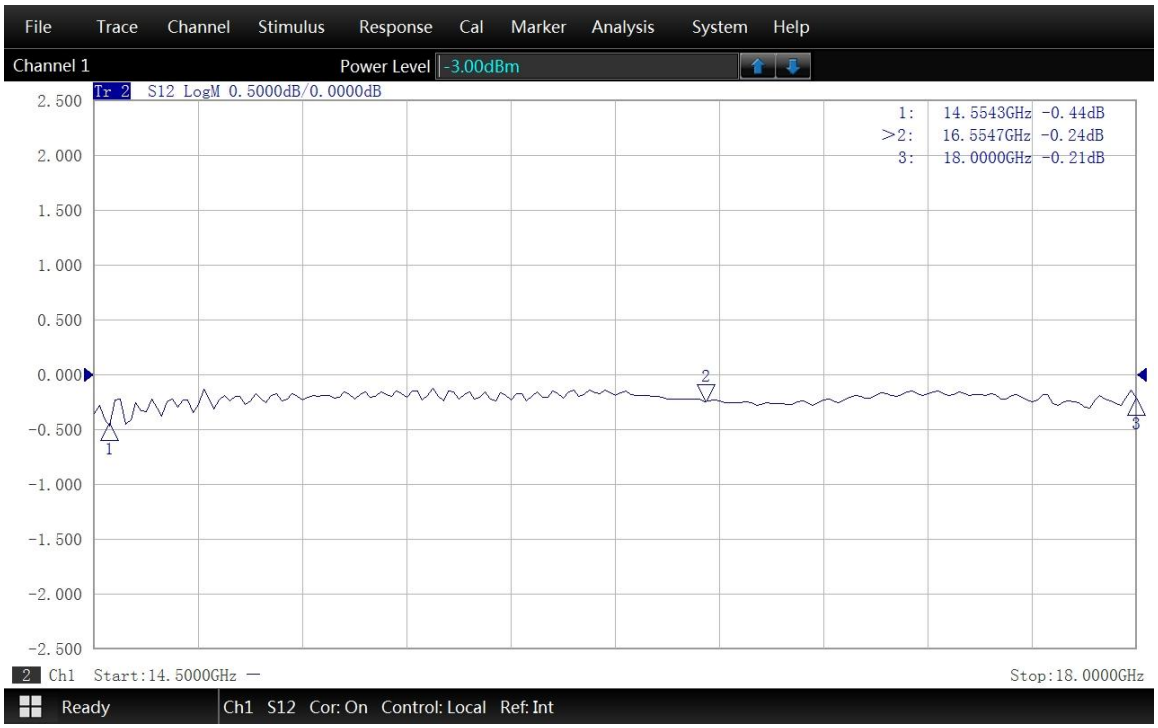

Insertion Loss*

* In Insertion Loss (IL) testing, adapters are measured back-to-back. To obtain the loss of a single adapter, divide the measured value by two.