ADPWR42SMAEL

WR42 to SMA Female Waveguide to Coaxial Adapter UBR220 Flange,End Launch



Electrical

Frequency Range	17.6-26.7 GHz
VSWR	1.2 max

Configuration

Waveguide Size	IEC	R220
	EIA	WR42
Flange	IEC	UBR220
	North America	Al alloy :M3922/54-002(UG597/U) Cu alloy:M3922/54-001(UG595/U)
Coax Connector	SMA Female	
Body Geometry	End Launch	

Mechanical & Environmental

Waveguide Body	Cu, acid pickling and passivation, anti-corrosive paint
Connector Body	Passivated stainless steel
Center Contact	Gold plated beryllium copper
Operating Temperature	-40℃ to +85℃
Connector Interface	MIL-STD-348
RoHS	Compliant under exemptions 6 (b) or 6 (c)
Net Weight	Approx 40g

Note

* Flange size may not be 100% identical with the above listed standards, but are compatible. Refer to the next page for comparison table.

* Paint in grey or black by default, other colors available.

ADPWR42SMAEL



WR42 to SMA Female Waveguide to Coaxial Adapter
UBR220 Flange, End Launch

Dimensions(mm)

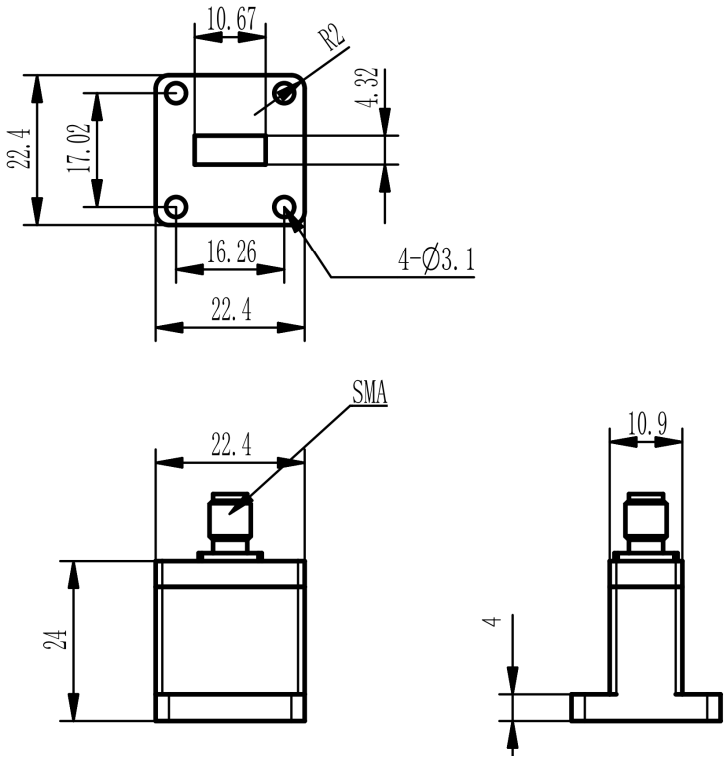

Flange Comparison (mm)

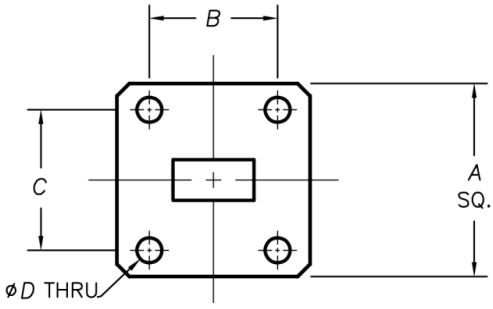

* The purpose of this comparison is to provide a quick reference of different flange standards. Great care has been given, nevertheless there might be a few mistakes.
* Please check the flange compatibility before ordering. Customized flanges are available.

WG SIZE	CONFORMING STANDARD	A	B	C	D
WR42	RF ONE:AWR42SMAEL	22.4	16.26	17.02	3.1
	IEC60154:UBR220	22.4	16.26	17.02	3.00
	USA:MIL3922/54-001(UG595/U)	22.22	16.26	17.02	2.95

ADPWR42SMAEL



WR42 to SMA Female Waveguide to Coaxial Adapter

UBR220 Flange, End Launch

Typical Test Data at 25℃

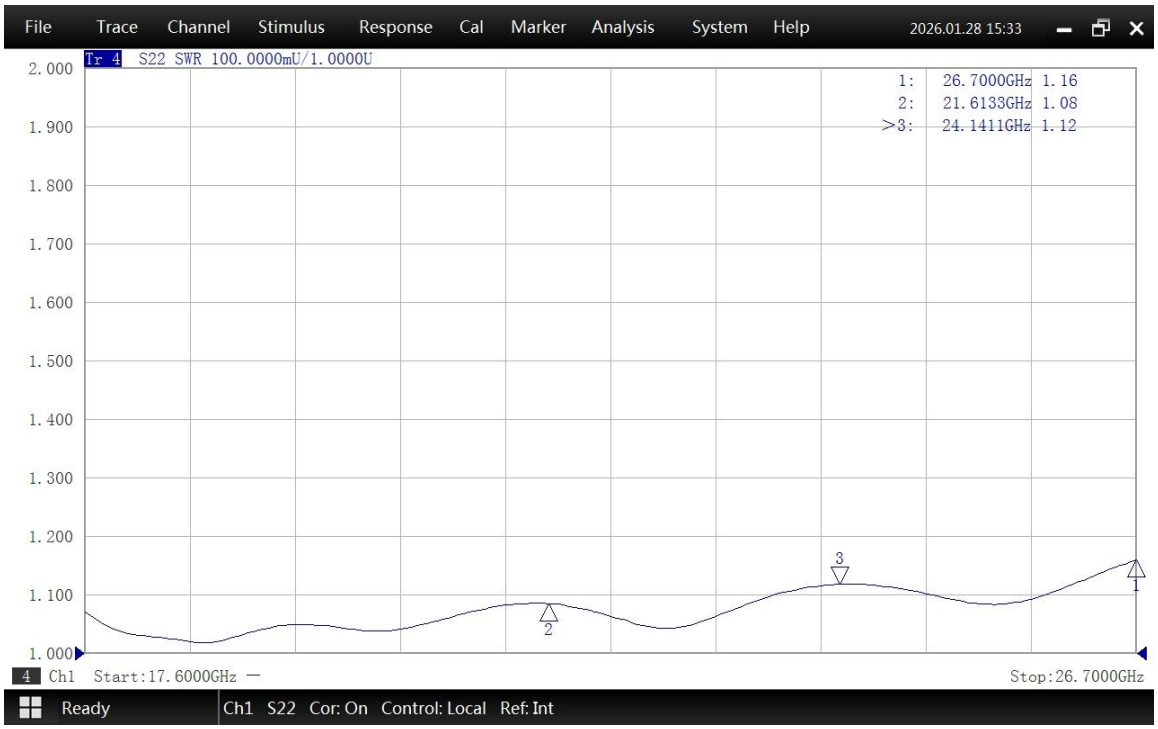

VSWR

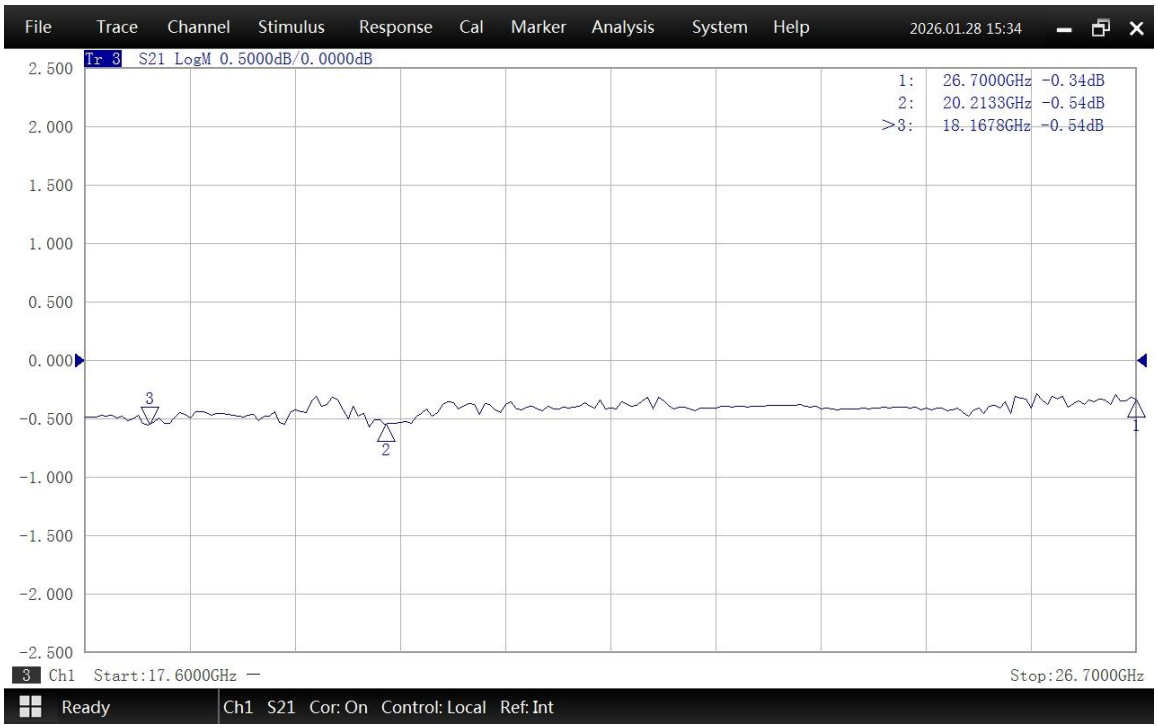

Insertion Loss*

* In Insertion Loss (IL) testing, adapters are measured back-to-back. To obtain the loss of a single adapter, divide the measured value by two.