# ADPWR42SMAG



## WR42 to SMA Female Waveguide to Coaxial Adapter
## PBR220 Flange, Right Angle

### Electrical

| | |
|---|---|
| Frequency Range | 17.6-26.7 GHz |
| VSWR | 1.2 max |

### Configuration

| | | |
|---|---|---|
| Waveguide Size | IEC | R220 |
| | EIA | WR42 |
| Flange | IEC | PBR220 |
| Coax Connector | SMA Female | |
| Body Geometry | Right Angle | |

### Mechanical & Environmental

| | |
|---|---|
| Waveguide Body | Cu, acid pickling and passivation, anti-corrosive paint |
| Connector Body | Passivated stainless steel |
| Center Contact | Gold plated beryllium copper |
| Operating Temperature | -40℃ to +85℃ |
| Connector Interface | MIL-STD-348 |
| RoHS | Compliant under exemptions 6 (b) or 6 (c) |
| Net Weight | Approx 70g |

### Note

* Paint in grey or black by default, other colors available.

# ADPWR42SMAG



**WR42 to SMA Female Waveguide to Coaxial Adapter**

**PBR220 Flange, Right Angle**

---

**Dimensions(mm)**

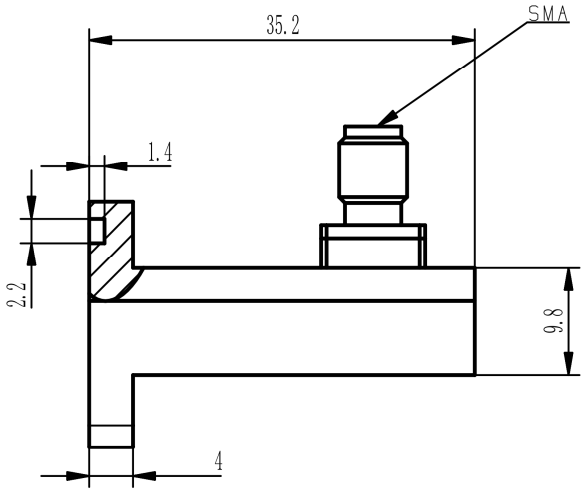


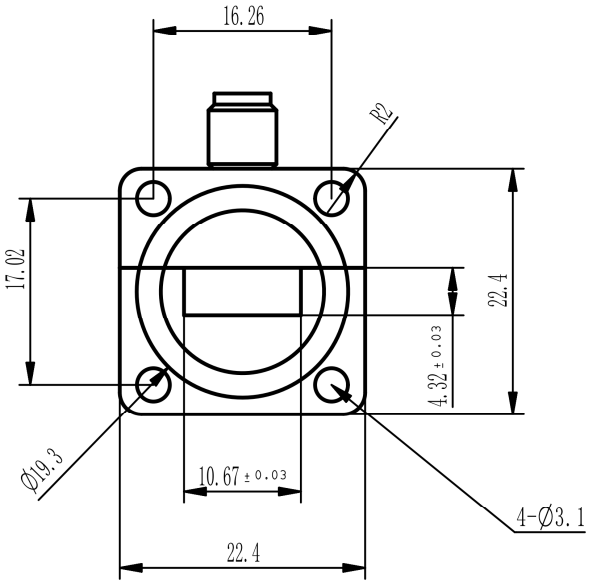


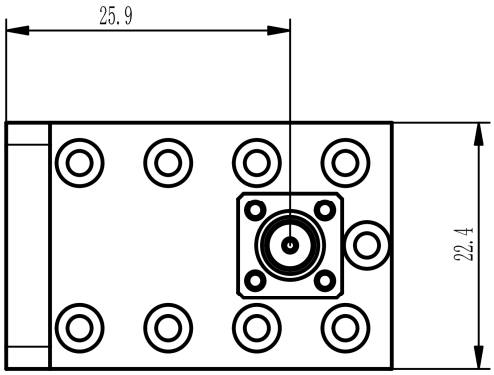

# ADPWR42SMAG



## WR42 to SMA Female Waveguide to Coaxial Adapter

## PBR220 Flange, Right Angle

### Typical Test Data at 25℃

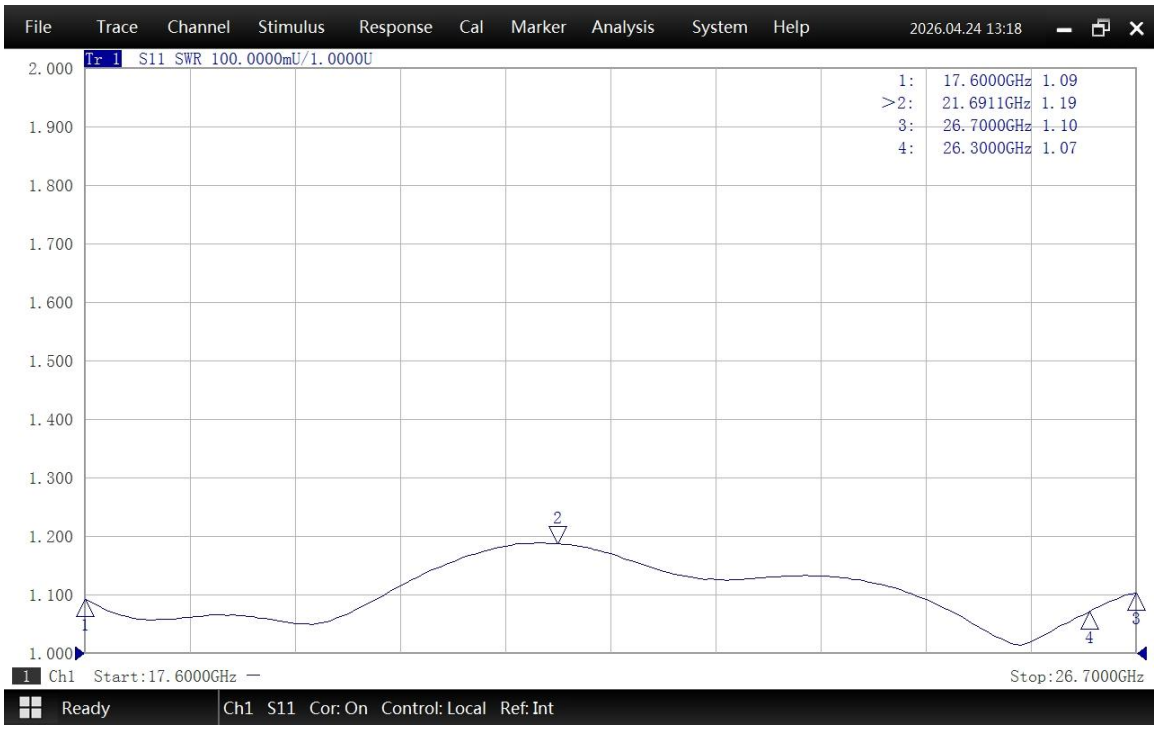


VSWR

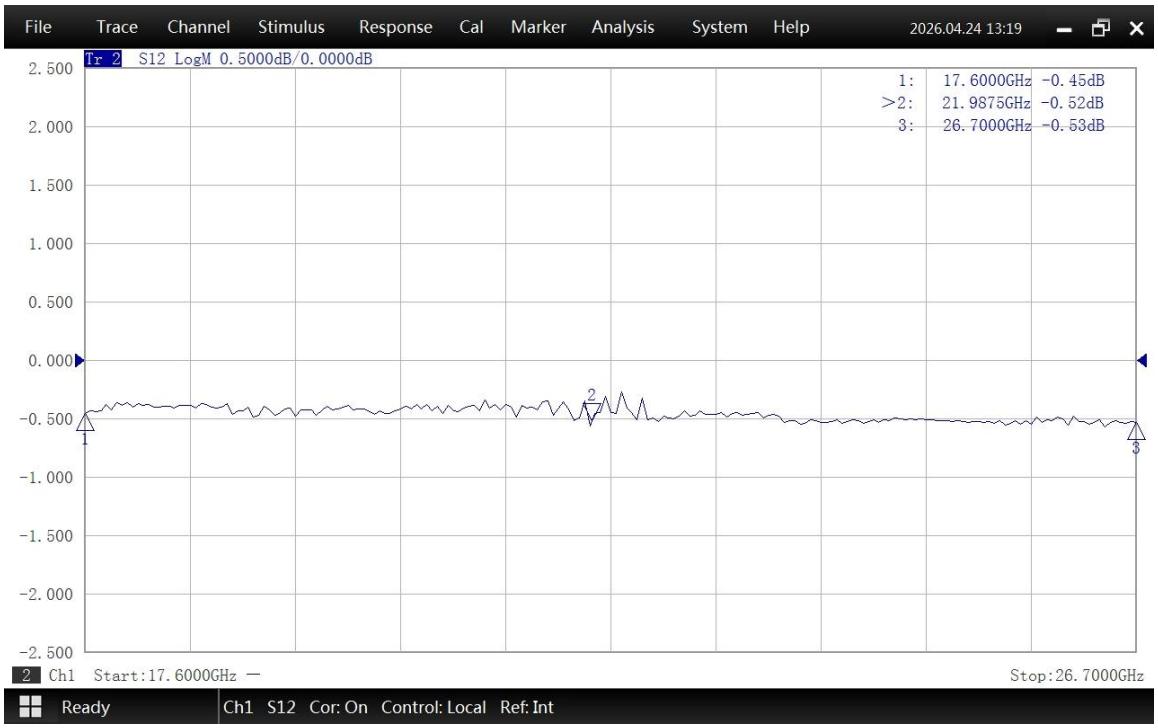


Insertion Loss*

* In Insertion Loss (IL) testing, adapters are measured back-to-back. To obtain the loss of a single adapter, divide the measured value by two.