ADPWR42292A

WR42 to 2.92mm Female Waveguide to Coaxial Adapter
UG595/U Flange, Right Angle

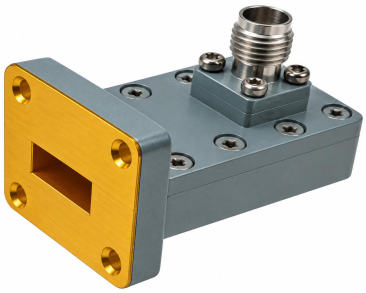

Electrical

Frequency Range	17.6-26.7 GHz
VSWR	1.2 max

Configuration

Waveguide Size	IEC	R220
	EIA	WR42
Flange	UG595/U	
Coax Connector	2.92mm Female	
Body Geometry	Right Angle	

Mechanical & Environmental

Waveguide Body	Cu, acid pickling and passivation, anti-corrosive paint
Connector Body	Passivated stainless steel
Center Contact	Gold plated beryllium copper
Operating Temperature	-40℃ to +85℃
Connector Interface	MIL-STD-348
RoHS	Compliant under exemptions 6 (b) or 6 (c)
Net Weight	Approx 60g

Note

* Paint in grey or black by default, other colors available.

ADPWR42292A

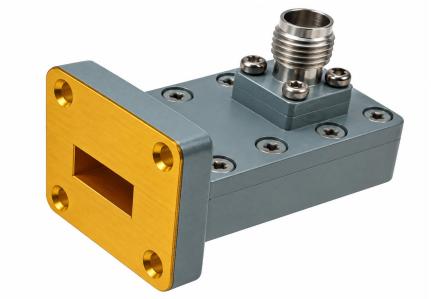

WR42 to 2.92mm Female Waveguide to Coaxial Adapter
UG595/U Flange, Right Angle

Dimensions(mm)

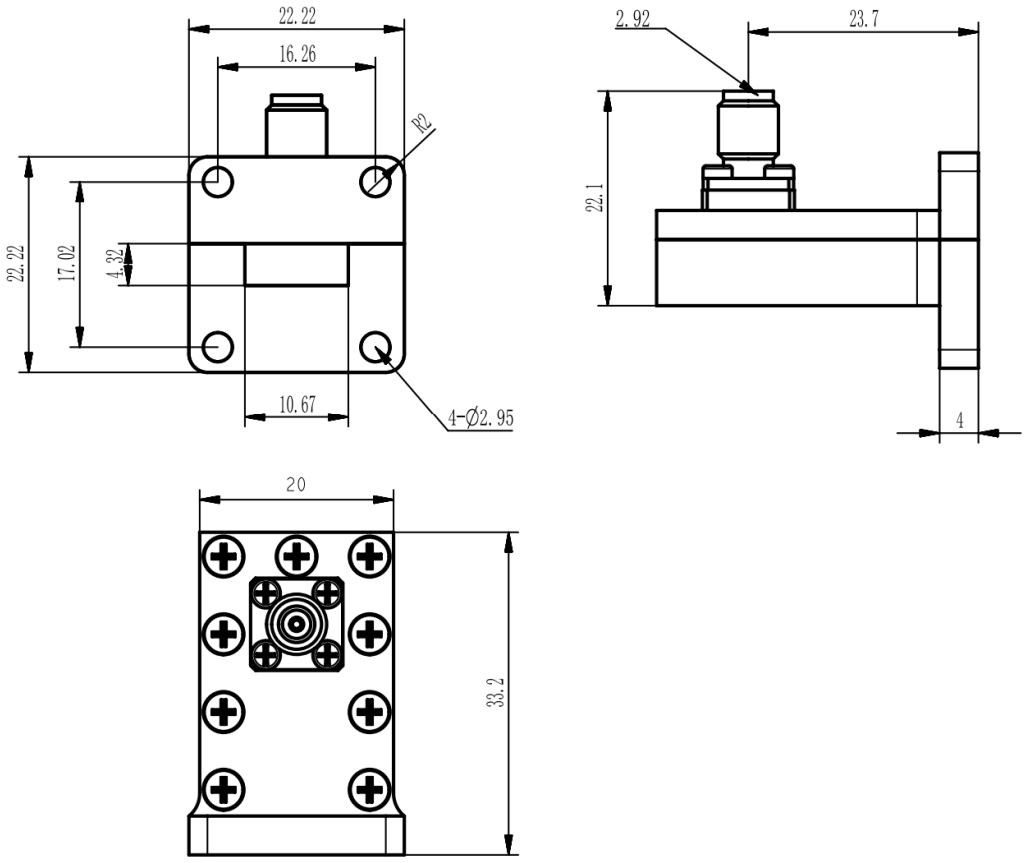

ADPWR42292A

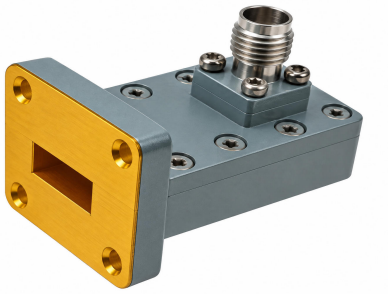

WR42 to 2.92mm Female Waveguide to Coaxial Adapter

UG595/U Flange, Right Angle

Typical Test Data at 25℃



VSWR

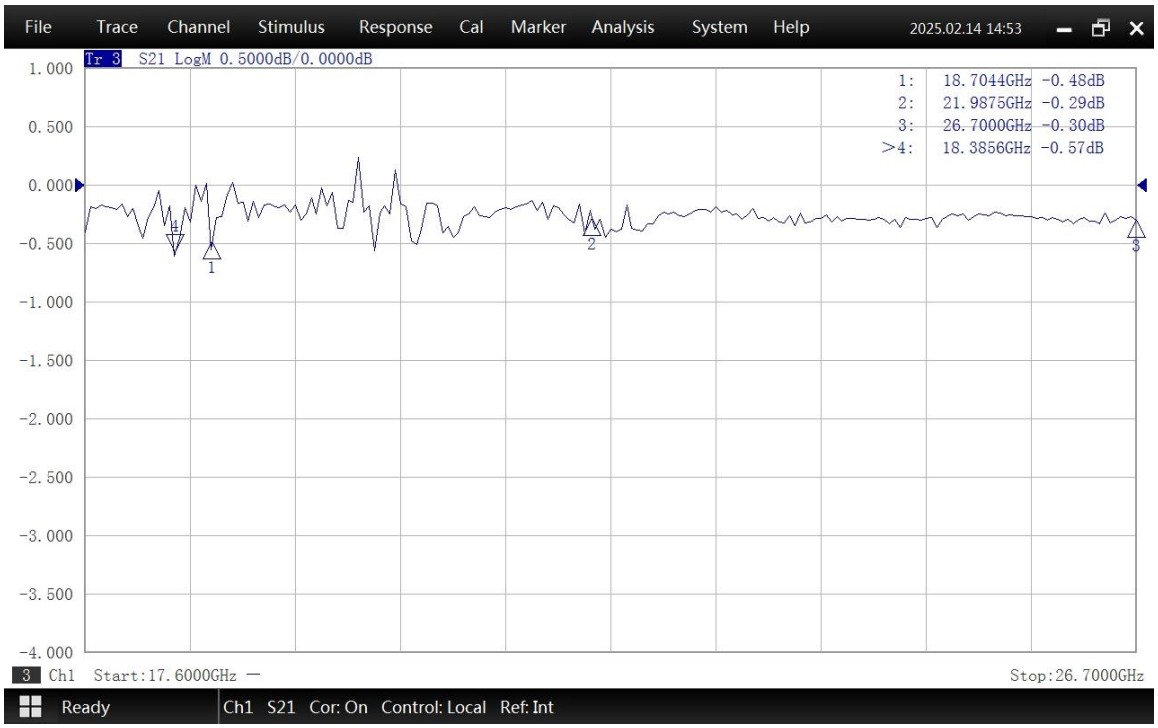

Insertion Loss*

* In Insertion Loss (IL) testing, adapters are measured back-to-back. To obtain the loss of a single adapter, divide the measured value by two.