ADPWR28292G

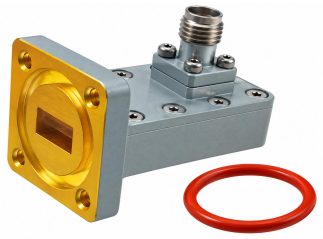

WR28 to 2.92mm Female Waveguide to Coaxial Adapter
PBR320 Flange, Right Angle

Electrical

Frequency Range	26.3-40 GHz
VSWR	1.2 max

Configuration

Waveguide Size	IEC	R320
	EIA	WR28
Flange	IEC	PBR320
Coax Connector	2.92mm Female	
Body Geometry	Right Angle	

Mechanical & Environmental

Waveguide Body	Cu, acid pickling and passivation, anti-corrosive paint
Connector Body	Passivated stainless steel
Center Contact	Gold plated beryllium copper
Operating Temperature	-40℃ to +85℃
Connector Interface	MIL-STD-348
RoHS	Compliant under exemptions 6 (b) or 6 (c)
Net Weight	Approx 40g

Note

* Paint in grey or black by default, other colors available.

ADPWR28292G

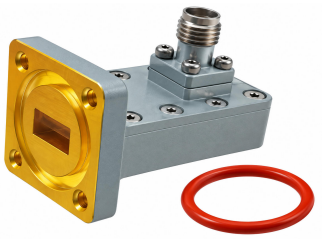

WR28 to 2.92mm Female Waveguide to Coaxial Adapter

PBR320 Flange, Right Angle

Dimensions(mm)

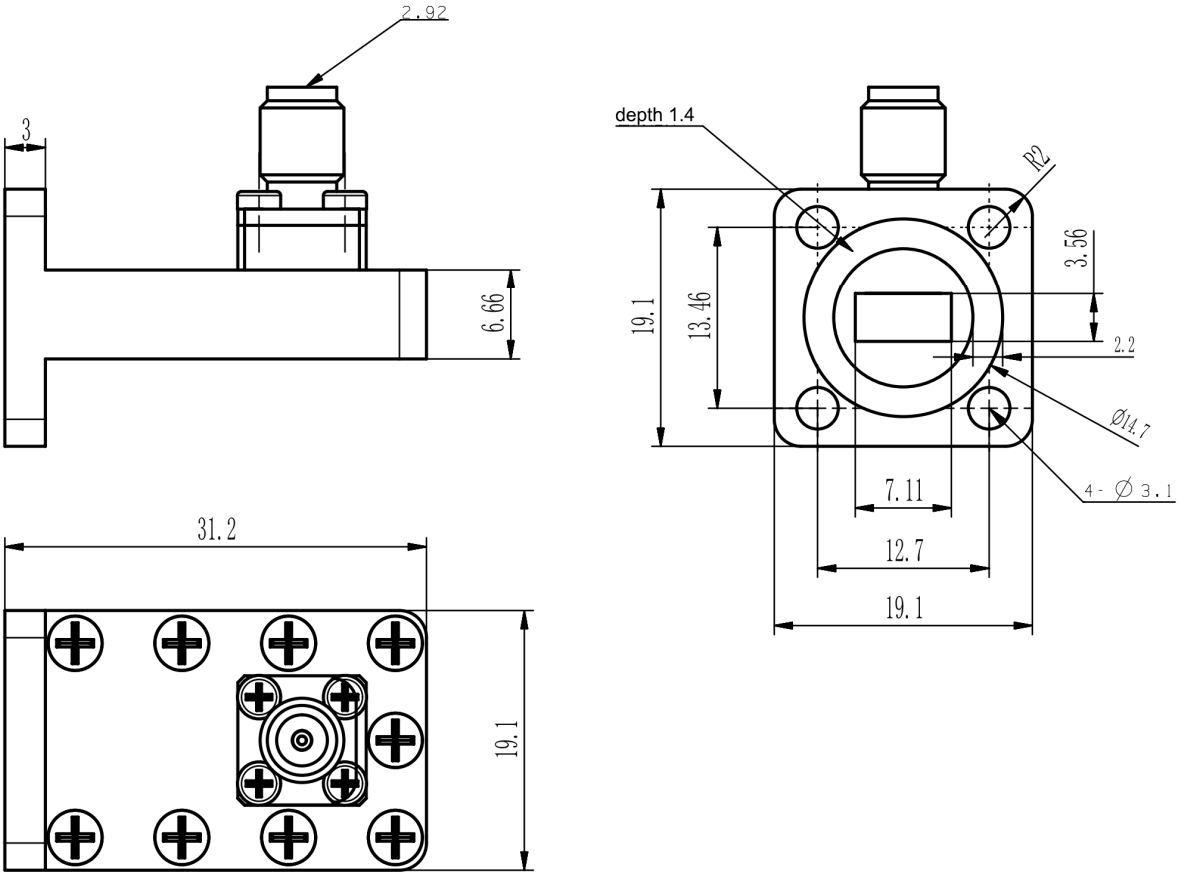

ADPWR28292G

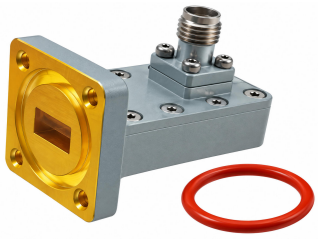

WR28 to 2.92mm Female Waveguide to Coaxial Adapter

PBR320 Flange, Right Angle

Typical Test Data at 25℃

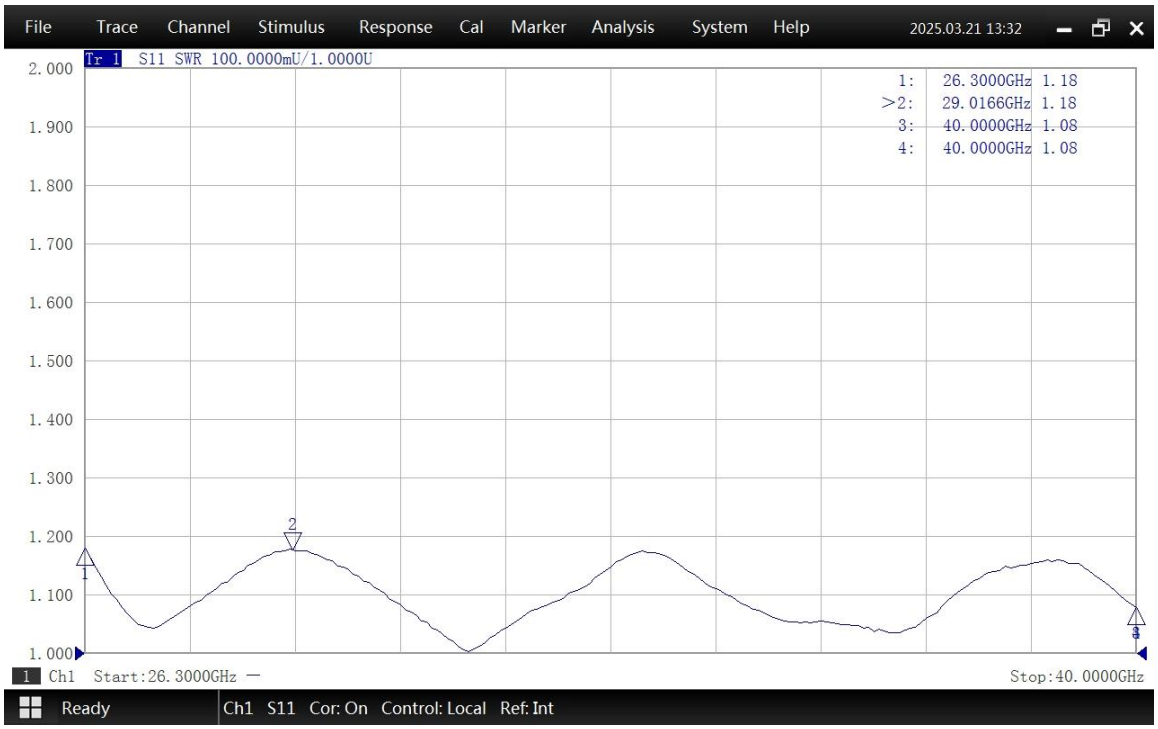

VSWR

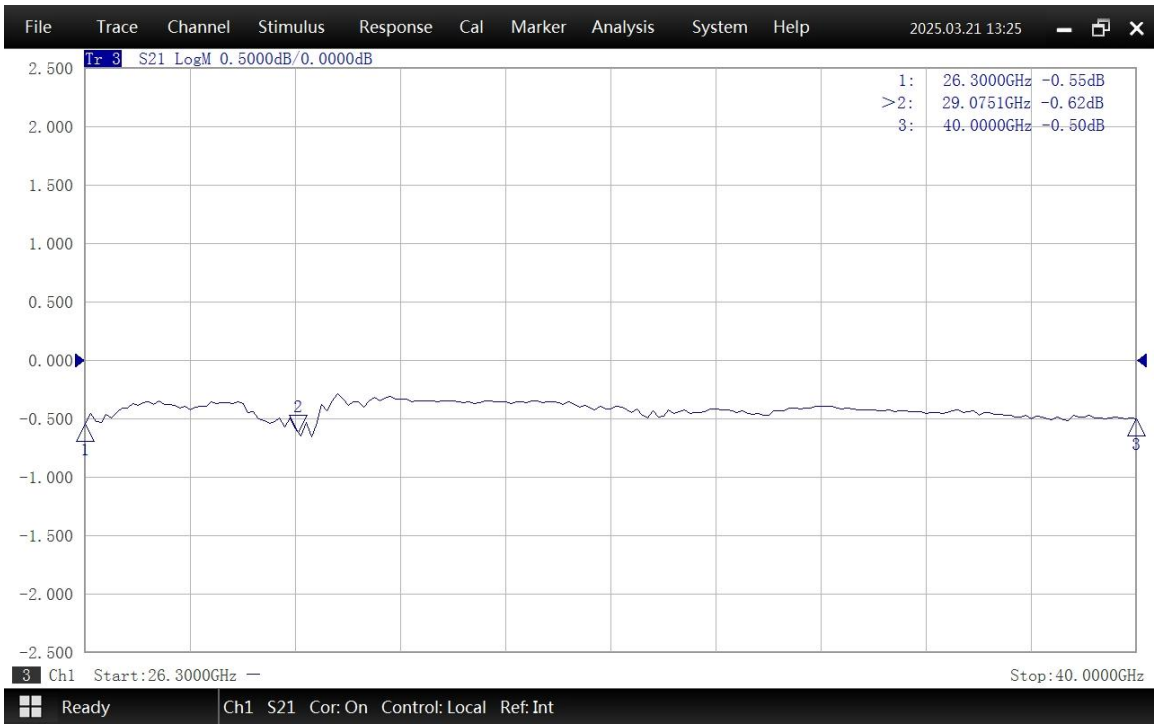

Insertion Loss*

* In Insertion Loss (IL) testing, adapters are measured back-to-back. To obtain the loss of a single adapter, divide the measured value by two.