# ADPWR22185EL



## Electrical

| | |
|---|---|
| Frequency Range | 32.9-50.1 GHz |
| VSWR | 1.3 max |

## Configuration

| | | |
|---|---|---|
| Waveguide Size | IEC | R400 |
| | EIA | WR22 |
| Flange | IEC | / |
| | North America | M3922/67-001(UG383/U) |
| Coax Connector | 1.85mm Female | |
| Body Geometry | End launch | |

## Mechanical & Environmental

| | |
|---|---|
| Waveguide Body | Cu, gold plated |
| Connector Body | Passivated stainless steel |
| Center Contact | Gold plated beryllium copper |
| Operating Temperature | -40℃ to +85℃ |
| Connector Interface | IEC-61169 |
| RoHS | Compliant under exemptions 6 (b) or 6 (c) |
| Net Weight | Approx 40g |

# ADPWR22185EL



## WR22 to 1.85mm Female Waveguide to Coaxial Adapter
## UG383/U Flange, End-launch

**Dimensions(mm)**

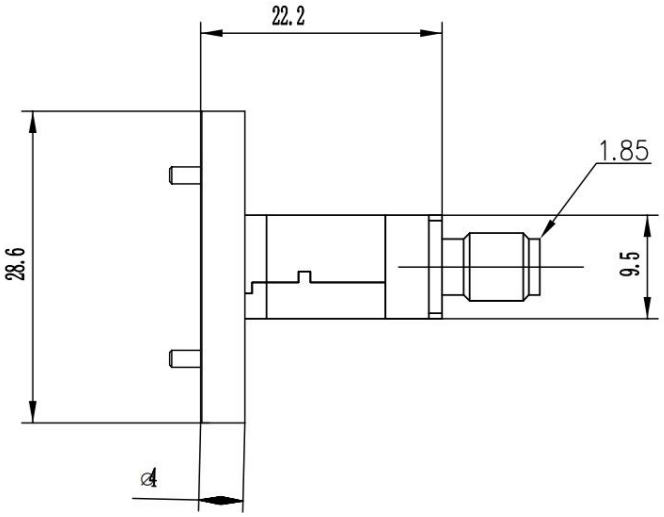


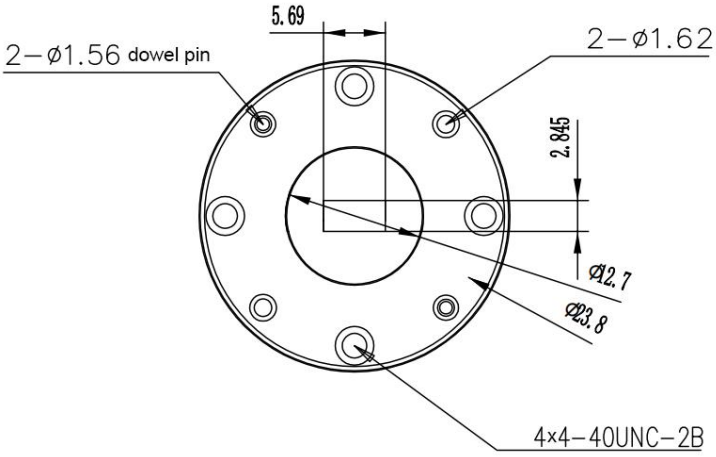


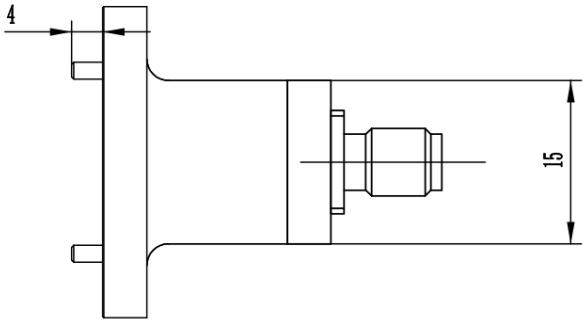

# ADPWR22185EL



## WR22 to 1.85mm Female Waveguide to Coaxial Adapter UG383/U Flange, End-launch

### Typical Test Data at 25℃

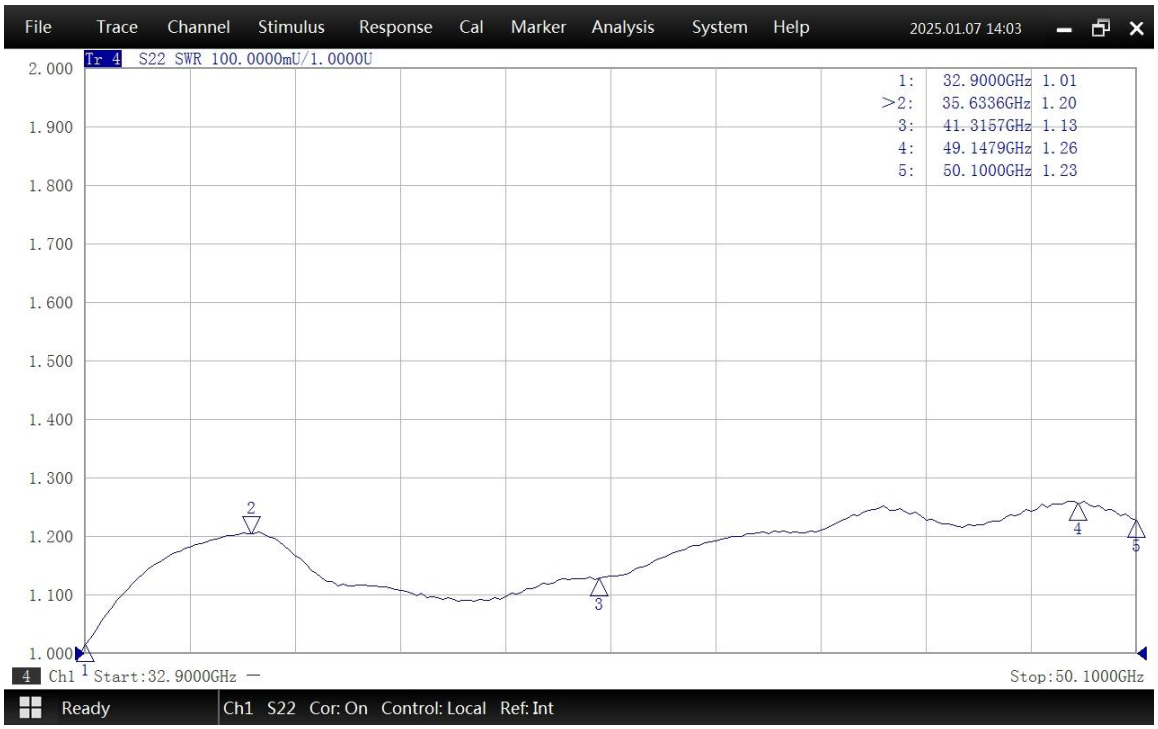


VSWR

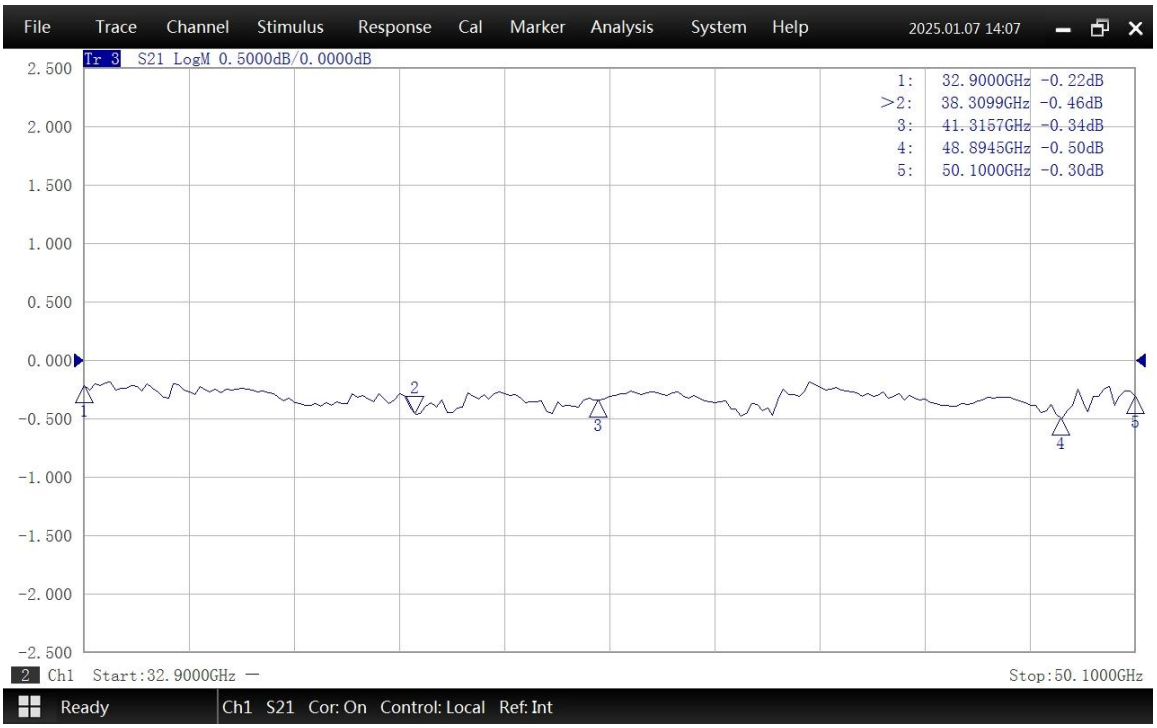


Insertion Loss*

* In Insertion Loss (IL) testing, adapters are measured back-to-back. To obtain the loss of a single adapter, divide the measured value by two.