ADPWR2224M



WR22 to 2.4mm Male Waveguide to Coaxial Adapter
UG383/U Flange, Right Angle

Electrical

Frequency Range	32.9-50.1 GHz
VSWR	1.3 max

Configuration

Waveguide Size	IEC	R400
	EIA	WR22
Flange	IEC	/
	North America	M3922/67-001(UG383/U)
Coax Connector	2.4mm Male	
Body Geometry	Right Angle	

Mechanical & Environmental

Waveguide Body	Cu, gold plated
Connector Body	Passivated stainless steel
Center Contact	Gold plated beryllium copper
Operating Temperature	-40℃ to +85℃
Connector Interface	IEC-61169
RoHS	Compliant under exemptions 6 (b) or 6 (c)
Net Weight	Approx 45g

ADPWR2224M



WR22 to 2.4mm Male Waveguide to Coaxial Adapter UG383/U Flange, Right Angle

Dimensions(mm)

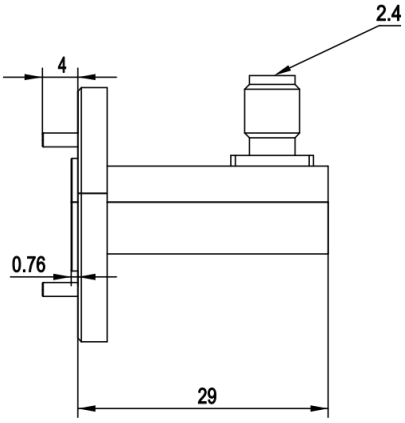

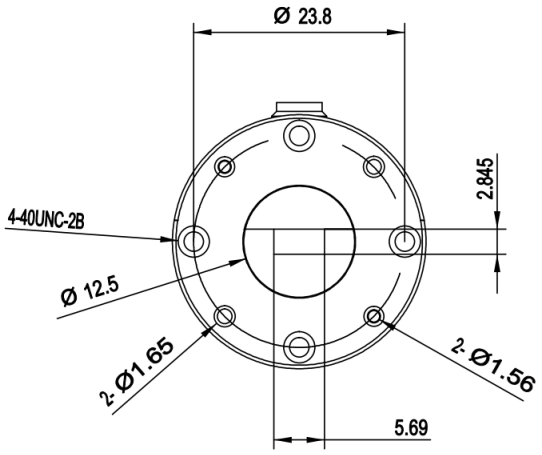

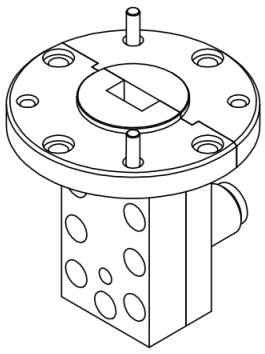

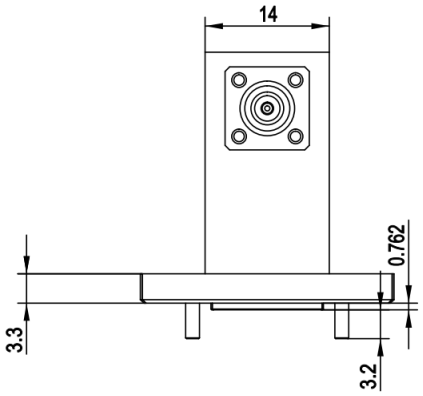

ADPWR2224M



WR22 to 2.4mm Male Waveguide to Coaxial Adapter

UG383/U Flange, Right Angle

Typical Test Data at 25℃

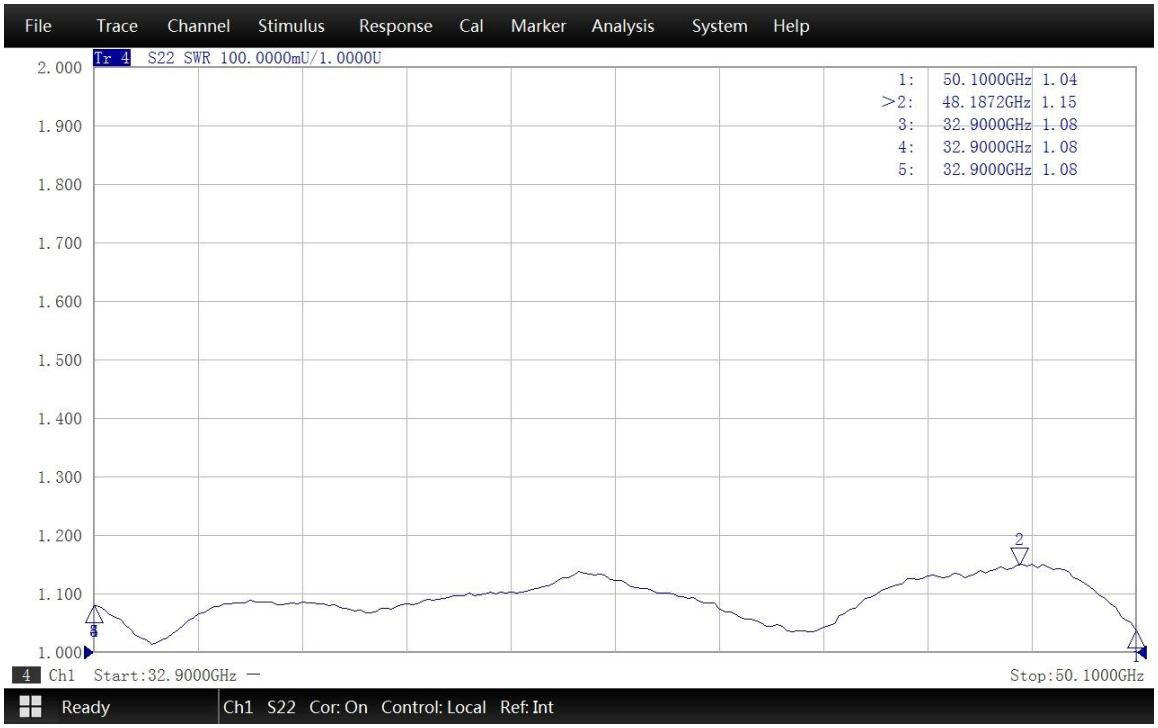

VSWR

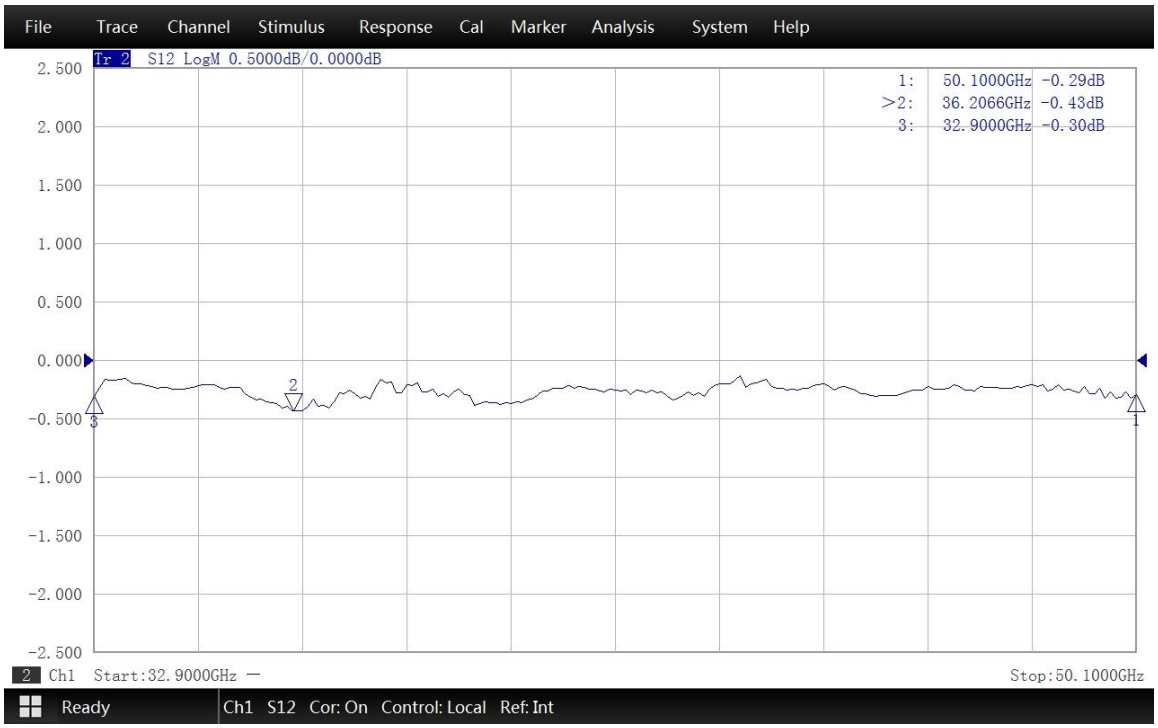

Insertion Loss*

* In Insertion Loss (IL) testing, adapters are measured back-to-back. To obtain the loss of a single adapter, divide the measured value by two.