ADPWR101EM



WR10 to 1mm Male Waveguide to Coaxial Adapter UG387/U Flange, End-launch

Electrical

Frequency Range	73.8-110 GHz
VSWR	1.5 max

Configuration

Waveguide Size	IEC	900
	EIA	WR10
Flange	IEC	/
	North America	UG387/U
Coax Connector	1mm Male	
Body Geometry	End-launch	

Mechanical & Environmental

Waveguide Body	Cu, gold plated
Connector Body	Passivated stainless steel
Center Contact	Gold plated beryllium copper
Operating Temperature	-40℃ to +85℃
Connector Interface	IEC-61169
RoHS	Compliant under exemptions 6 (b) or 6 (c)
Net Weight	Approx 14g

ADPWR101EM



WR10 to 1mm Male Waveguide to Coaxial Adapter

UG387/U Flange, End-launch

Dimensions(mm)

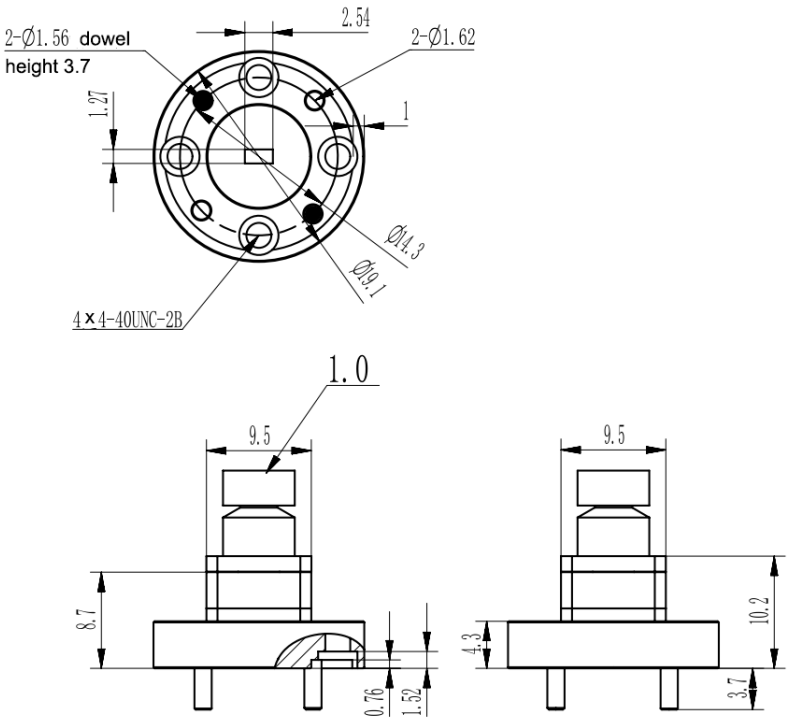

ADPWR101EM



WR10 to 1mm Male Waveguide to Coaxial Adapter

UG387/U Flange, End-launch

Typical Test Data at 25℃

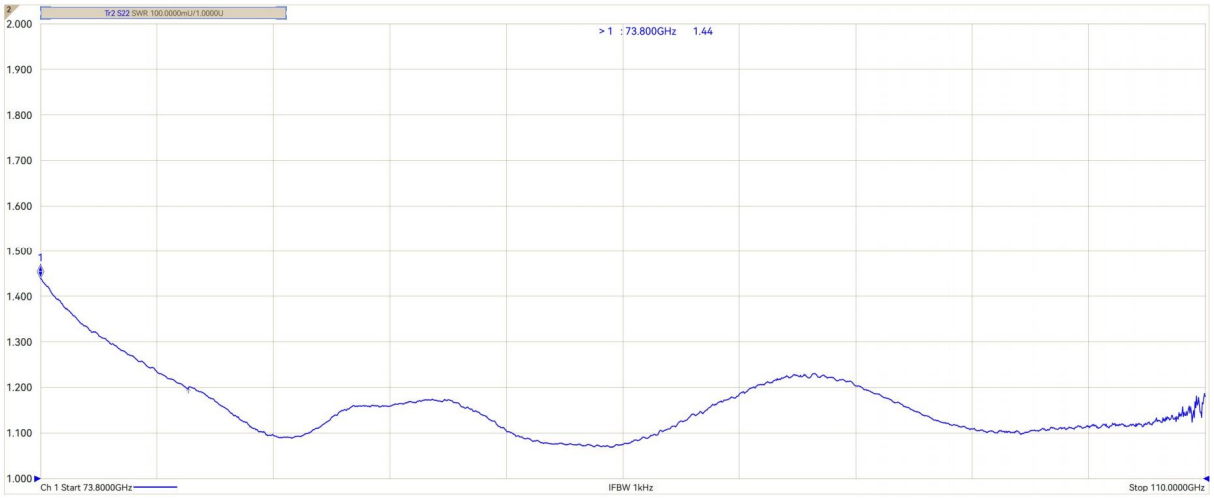

VSWR

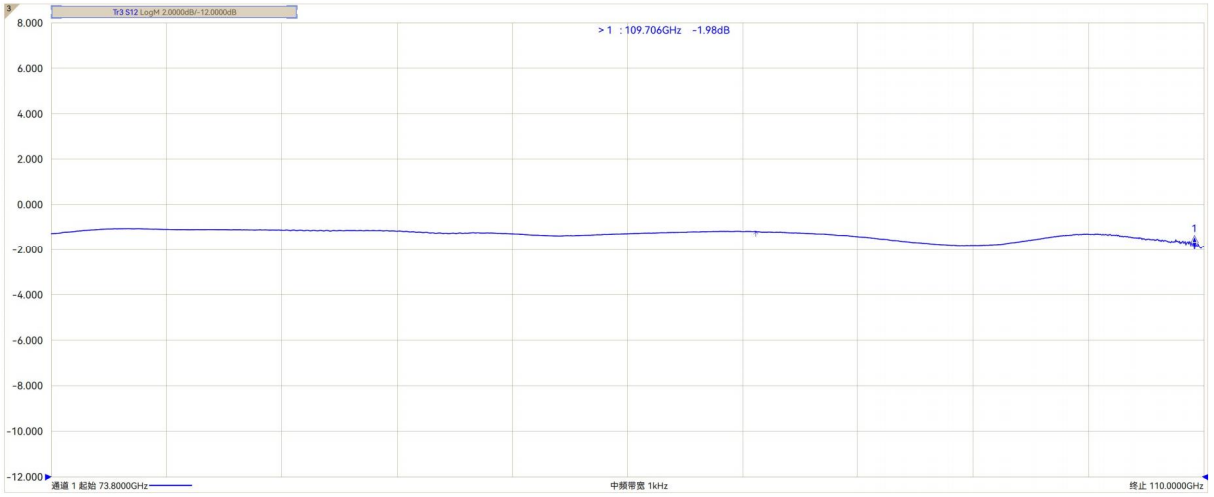

Insertion Loss*

* In Insertion Loss (IL) testing, adapters are measured back-to-back. To obtain the loss of a single adapter, divide the measured value by two.