SSMA Male to N Female Adapter

ADP1811B

Drawing(mm)

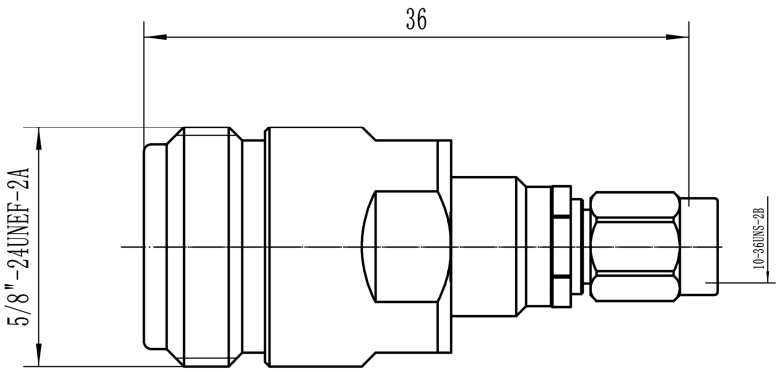



Electrical & Environmental

Impedance	50 ohm
Frequency Range	18 GHz
VSWR	1.15 max
Operating Temp	-55℃ to +165℃
Interface	N&SSMA per MIL-STD-348

Material

Connector Body	Passivated stainless steel
Center Contact	Gold plated beryllium copper
Insulator	PEI

Typical Test Data

