Low PIM DIN Female to N Male Adapter

ADP0640L

Drawing(mm)

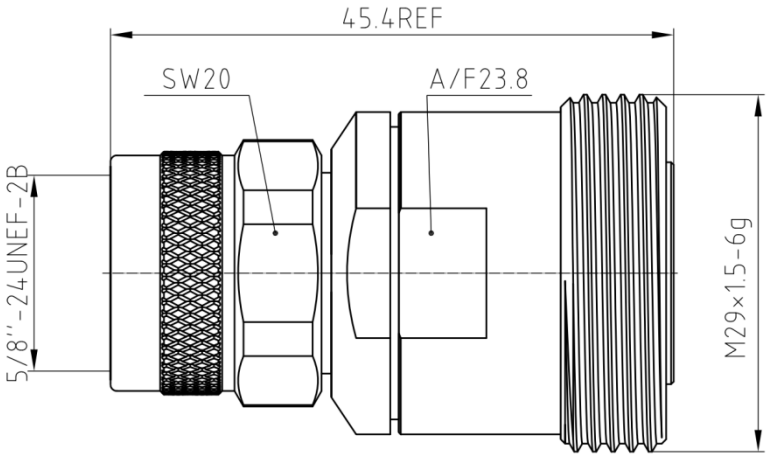



Electrical & Environmental

Impedance	50 ohm
Frequency Range	DC-6 GHz
VSWR	1.25 max
PIM (Intermod)	-160dBc min with 2×20W tones
Operating Temp	-40℃ ~ +125℃
RoHS	Compliant

Material

Connector Body	Ternary alloy plated brass
Center Contact	Silver plated beryllium copper
Insulator	PTFE
Weight	102g