# ADP-AHS-VFVF-1

## Hermetically Sealed 1.85mm Female to 1.85mm Female Adapter, Bulkhead

### Applications

- Vacuum
- High pressure
- Airtight seal



### Electrical

| | |
|---|---|
| Impedance | 50 ohm |
| Frequency Range | DC-67 GHz |
| VSWR | ≤1.5 |
| Operating Voltage (AC) | ≤250 Vrms |
| Dielectric Withstanding Voltage (AC) | ≤750 Vrms |
| Insulation Resistance | ≥5000 MOhms |
| Hermetically (Leak Rate) | <1 x $10^{-8}$ cc/sec of helium at 1 atm |
| Operating Temperature | -25°C to +125°C |
| IP Rate | IP68 when mated |

### Mechanical

| | |
|---|---|
| Connector Body | Passivated stainless steel |
| Center Contact | Beryllium Copper, Gold Plated |
| Inner Seal Body and Finish | Kovar, Gold Plated |
| Inner Seal Insulator | Glass |
| O Ring | Fluororubber |
| Coupling Torque Recommended | 0.9 Nm |

### Dr aw ing (Dimensions are in mm)

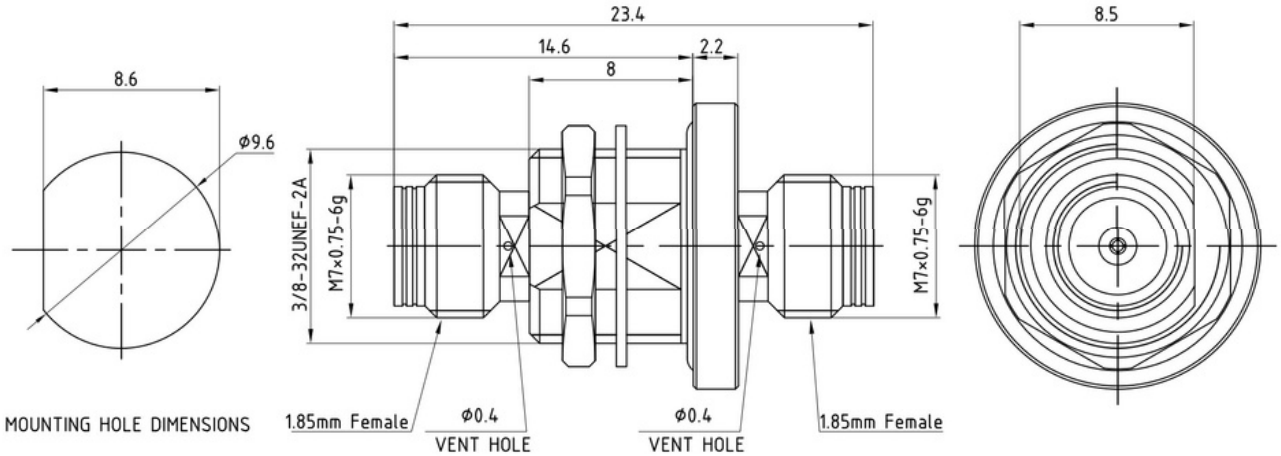

# ADP-AHS-VFVF-1

## Hermetically Sealed 1.85mm Female to 1.85mm Female Adapter, Bulkhead

### Typical Test Data

