ADP-AHS-SFSF-1

Hermetically Sealed SMA Female to SMA Female Adapter, Bulkhead

Applications

- Vacuum
- High pressure
- Airtight seal



Electrical

Impedance	50 ohm
Frequency Range	DC-18 GHz
VSWR	≤1.25
Operating Voltage (AC)	≤250 Vrms
Dielectric Withstanding Voltage (AC)	≤1500 Vrms
Insulation Resistance	≥5000 MOhms
Hermetically (Leak Rate)	<1 x 10^{-8} cc/sec of helium at 1 atm
Operating Temperature	-25°C to +125°C
IP Rate	IP68 when mated

Mechanical

Connector Body	Gold plated stainless steel
Center Contact	Beryllium Copper, Gold Plated
Inner Seal Body and Finish	Kovar, Gold Plated
Inner Seal Insulator	Glass
O Ring	Fluororubber
Coupling Torque Recommended	0.9 Nm

Dr aw ing (Dimensions are in mm)

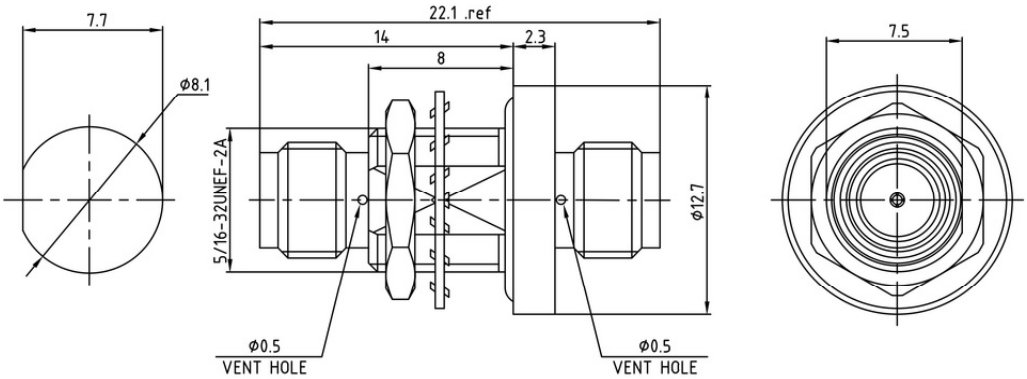

Hermetically Sealed SMA Female to SMA Female Adapter, Bulkhead

Typical Test Data

