ADP-AHS-QFQF-1

Hermetically Sealed 2.4mm Female to 2.4mm Female Adapter, Bulkhead



Applications

- Vacuum
- High pressure
- Airtight seal

Electrical

Impedance	50 ohm
Frequency Range	DC-50 GHz
VSWR	≤1.35
Operating Voltage (AC)	≤250 Vrms
Dielectric Withstanding Voltage (AC)	≤750 Vrms
Insulation Resistance	≥5000 MOhms
Hermetically (Leak Rate)	<1 x 10^{-8} cc/sec of helium at 1 atm
Operating Temperature	-25°C to +125°C
IP Rate	IP68 when mated

Mechanical

Connector Body	Passivated stainless steel
Center Contact	Beryllium Copper, Gold Plated
Inner Seal Body and Finish	Kovar, Gold Plated
Inner Seal Insulator	Glass
O Ring	Fluororubber
Coupling Torque Recommended	0.9 Nm

Dr aw ing (Dimensions are in mm)

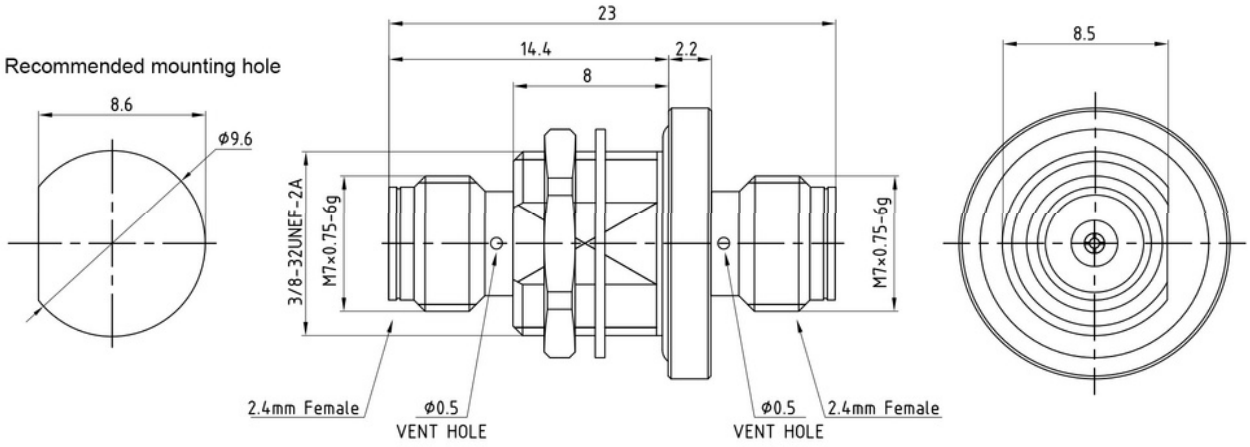

Hermetically Sealed 2.4mm Female to 2.4mm Female Adapter, Bulkhead

Typical Test Data

