Coaxial Fixed Attenuator SRFS-50XX24D20

DC-50 GHz, 10-40 dB, 20 Watts, 2.4mm, Unidirectional

Electrical

Impedance	50 ohm
Frequency Range	DC-50 GHz
VSWR	1.38 max
Input Avg Power	20W@ 25℃ ambient, derating linearly to 2W at 100℃
Peak Power	100W (5 micro-sec pulse width, 8% duty cycle)
Direction	

Attenuation(dB)	10	20	30	40
Accuracy(dB)	-2.0/+2.2	-1.2/+1.5	-1.2/+1.5	-1.2/+1.5

Mechanical

Connector Body	Passivated stainless steel
Heat Sink	Black anodized aluminum
Center Contact	1.27um Gold plated BeCu
Net Weight	Approx 90 g

Environmental

Operating Temperature	-55℃ to 100℃
Storage Temperature	-55℃ to 125℃
RoHS	Compliant
Temperature Coefficient	<0.0004 dB/dB/℃

Dimensions(mm)

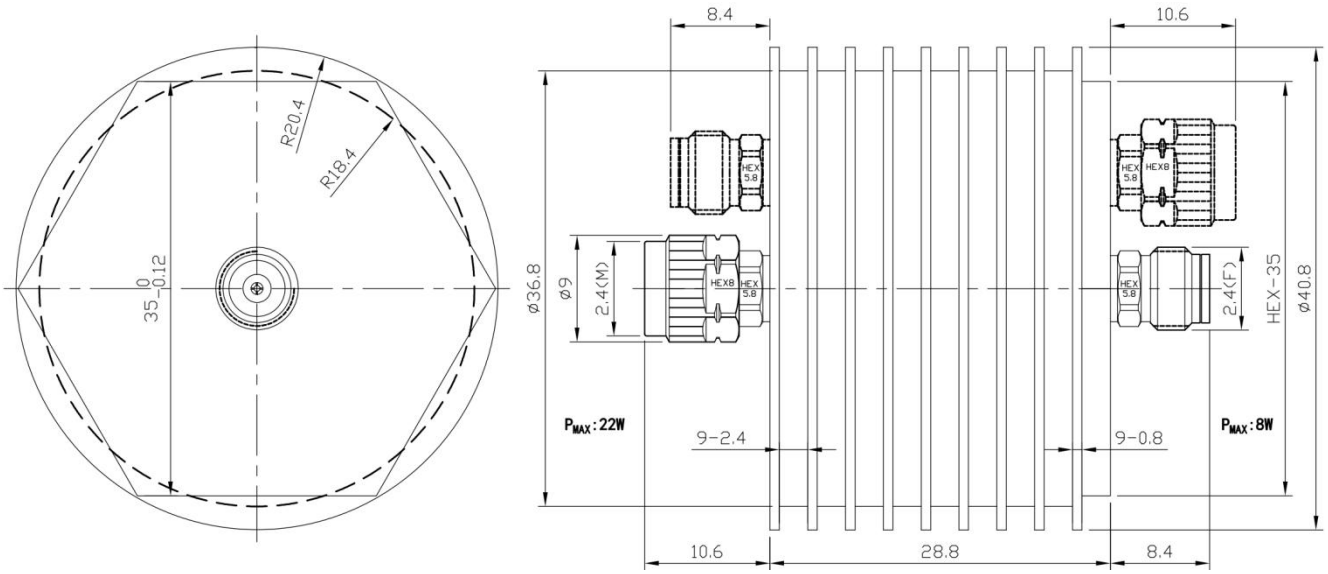

Typical Test Data
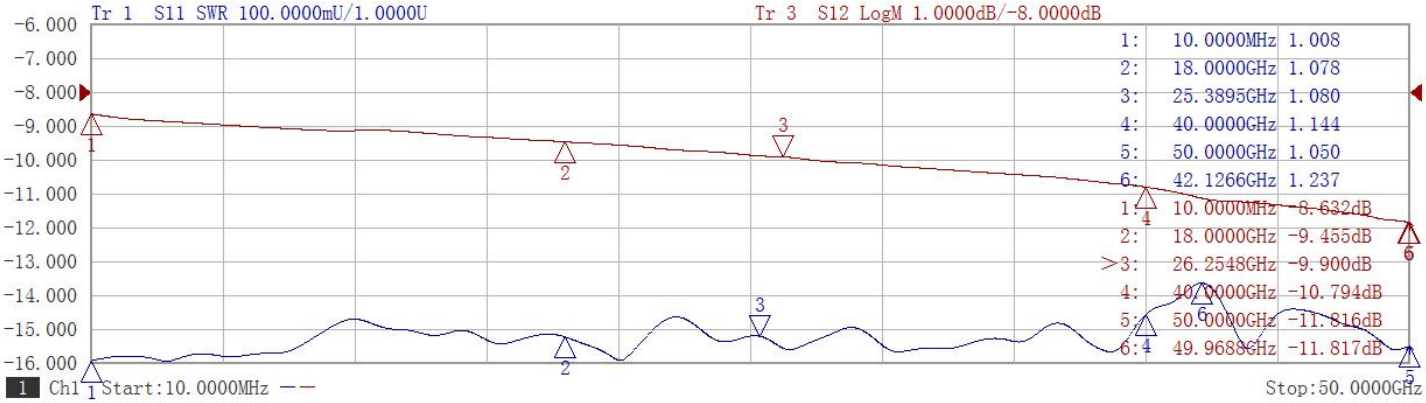
10dB