TRF5015242

Electrical

Impedance	50 ohm
Frequency Range	DC-50 GHz
VSWR	1.3 max
Input Avg Power	15W@25℃ ambient, derating linearly to 1.5W at 100℃
Peak Power	100W (5 micro-sec pulse width, 6% duty cycle)

Mechanical

Connector Body	Passivated stainless steel
Center Contact	1.27um gold plated BeCu
Heat Sink	Black anodized aluminum

Environmental

Operating Temp	-55℃ to 100℃
Storage Temp	-55℃ to 125℃
RoHS	Compliant

Dimensions(mm)

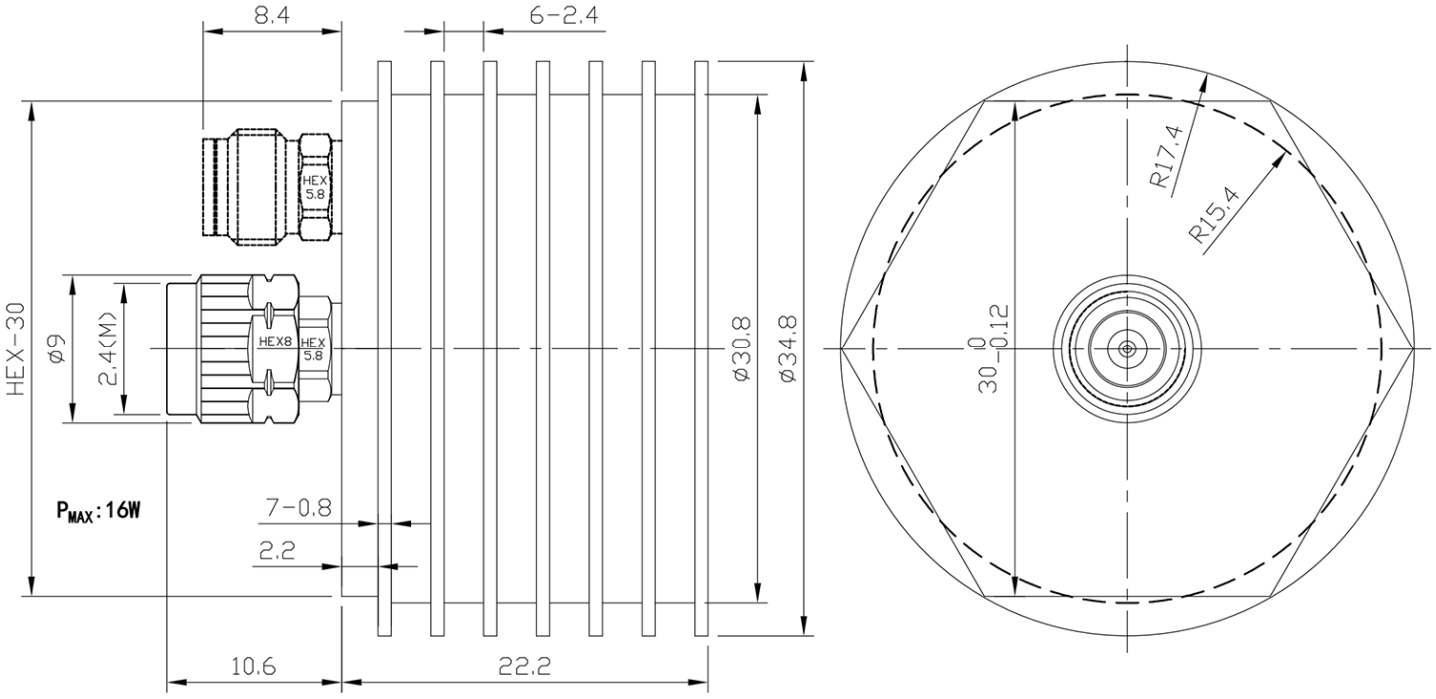
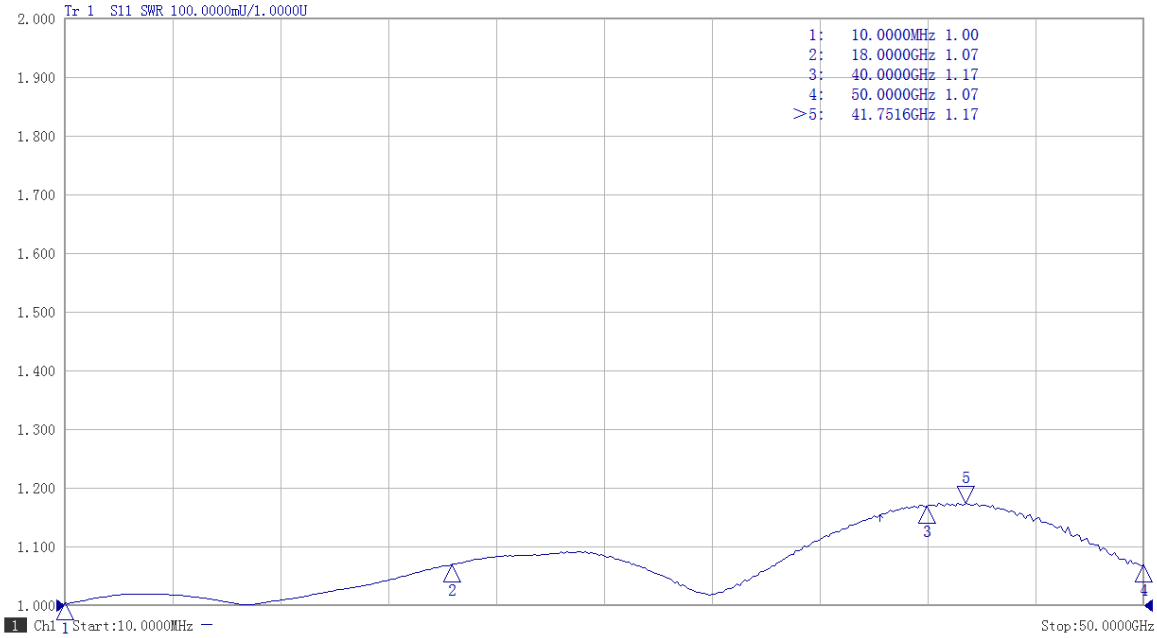
Typical Test Data