2.4mm Female to SMA Male Adapter

Drawing(mm)

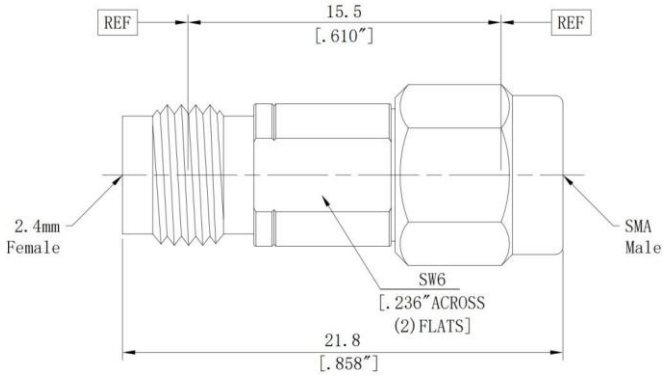

Electrical & Environmental

Impedance	50 ohm
Frequency Range	27 GHz
VSWR	1.15 max
Operating Temp	-55℃ to +165℃
Interface	SMA per MIL-STD-348, 2.4mm per IEC 61169

Material

Connector Body	Passivated stainless steel
Center Contact	Gold plated beryllium copper
Insulator	PEI&PTFE
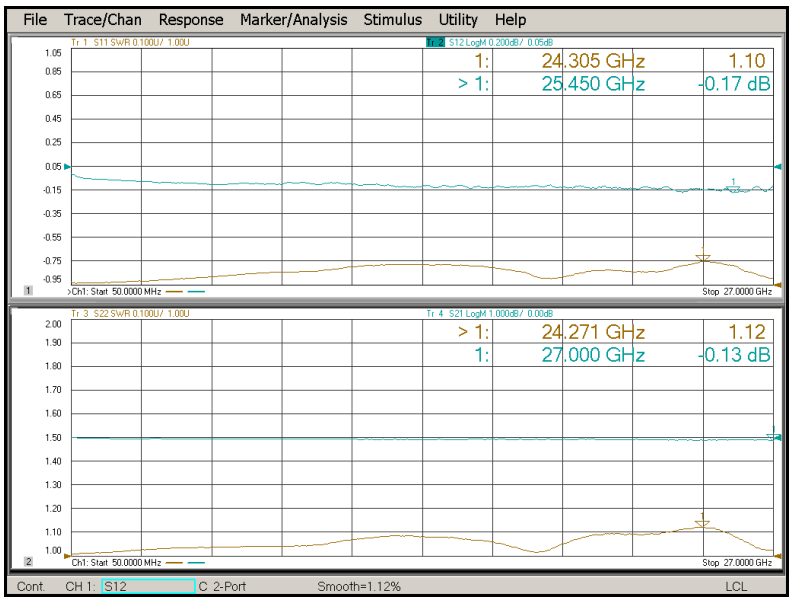
Typical Test Data