# SRFS TELEINFRA

## 2.92 mm Female 2 Hole Connector (SRFS-360S12F04)

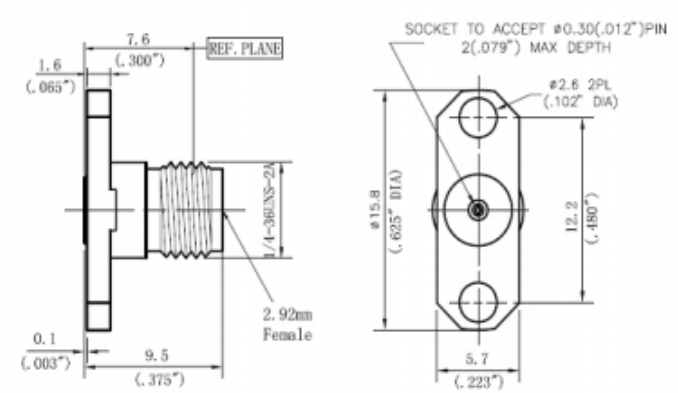


| ELECTRICAL&MECHANICAL SPECIFICATIONS | | |
|---|---|---|
| Characteristics Impedance | 50 ohm | |
| Frequency Range | DC-40GHz | |
| Insertion Loss | 0.35 dB Max @ 40 GHz | |
| VSWR GHz | ≤1.10:1 @27 GHz ,<1.15:1 @ 40 | |
| Dielectric Withstanding Voltage | ≥1200V | |
| Working Voltage | 1000Vrms,50 Hz at sea level | |
| Contact Resistance | Center Contact ≤ 3.0 mΩ<br><br>Outer Contact ≤ 2.0 mΩ | |
| Dielectric Resistance | ≥5000MΩ | |
| RF Leakage | -90 dBm min | |
| Durability Mating cycles | ≥500 | |
| Recommended Mating Torque | 0.9~1.13 Nm/8~10 lbs | |
| Proof Torque | 1.7 Nm/ 15.0 lbs | |
| **MATERIALS** | | |
| | Material | Plating |
| Body | Stainless Steel (SU303F) | Polished & Passivated |
| Insulator | PEI | - |
| Center conductor | Beryllium Copper | Au |
| **ENVIRONMENATAL SPECIFICATIONS** | | |
| Temperature Range | -40°C~+85°C | |
| Corrosion Resistance | MIL-STD-202, Method 101, Condition B | |
| Moisture Resistance | MIL-STD-202, Method 106 | |
| Thermal Shock | MIL –STD-202, Method 107 Condition B | |
| Vibration | MIL –STD-202,Method 204 Condition D | |


**Plot no 10 Shiv Vihar A Block Najafgarh Nala Road Vikasnagar Uttam Nagar New Delhi-110059**

**+91-9027232570, +91-8800726650** info@srfsteleinfra.in,info@srfsteleinfra.com

www.srfsteleinfra.in