SRFS TELEINFRA

1.85 MM MALE TO 3.5 MM FEMALE ADAPTOR Part No. SRFS–185-35MF/033

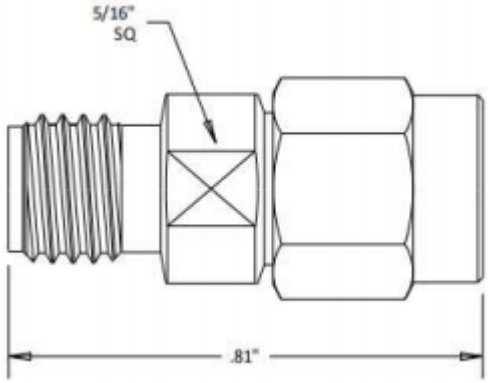

ELECTRICAL&MECHANICAL SPECIFICATIONS		
Characteristics Impedance	50 Ω	
Frequency Range	DC-33 GHz	
VSWR	1.25:1	
Working Voltage	335V max	
Insertion Loss	≤ 0.2 dB	
RF leakage	≤ 70dB @ 18 GHz	
Dielectric Withstanding Voltage	≤ 1000V RMS,50Hz,at sea level	
RF High Potential Withstanding Voltage	≤ 500V RMS @ 5 MHz	
Insulation Resistance	≥5000M OHM	
Contact Resistance	Center Contact ≤ 3mΩ Outer Contact ≤ 2 mΩ	
Durability	Mating cycles ≥500	
Dielectric Resistance	≥5000MΩ	
MATERIAL & PLATING		
	Material	Plating
Body	Stainless Steel	Passivated
Insulator	PEI	-
Center conductor	Beryllium Copper	Gold Plated
ENVIRONMENTAL SPECIFICATIONS		
Temperature Range	- 55°C ~ +165 °C	
Interface Standard	MIL- STD – 348A	
RoHS Compliant	Yes	

Plot no 10 Shiv Vihar A Block Najafgarh Nala Road Vikasnagar Uttam Nagar New Delhi-110059

+91-9027232570, +91-8800726650 info@srfsteleinfra.in,info@srfsteleinfra.com

www.srfsteleinfra.in